Curio Cabinet • Display Shelf • Saw Blade Rack • Shaker Wall Clock • Molded Bridle Joints

Woodsmith®

Vol. 19 / No. 113

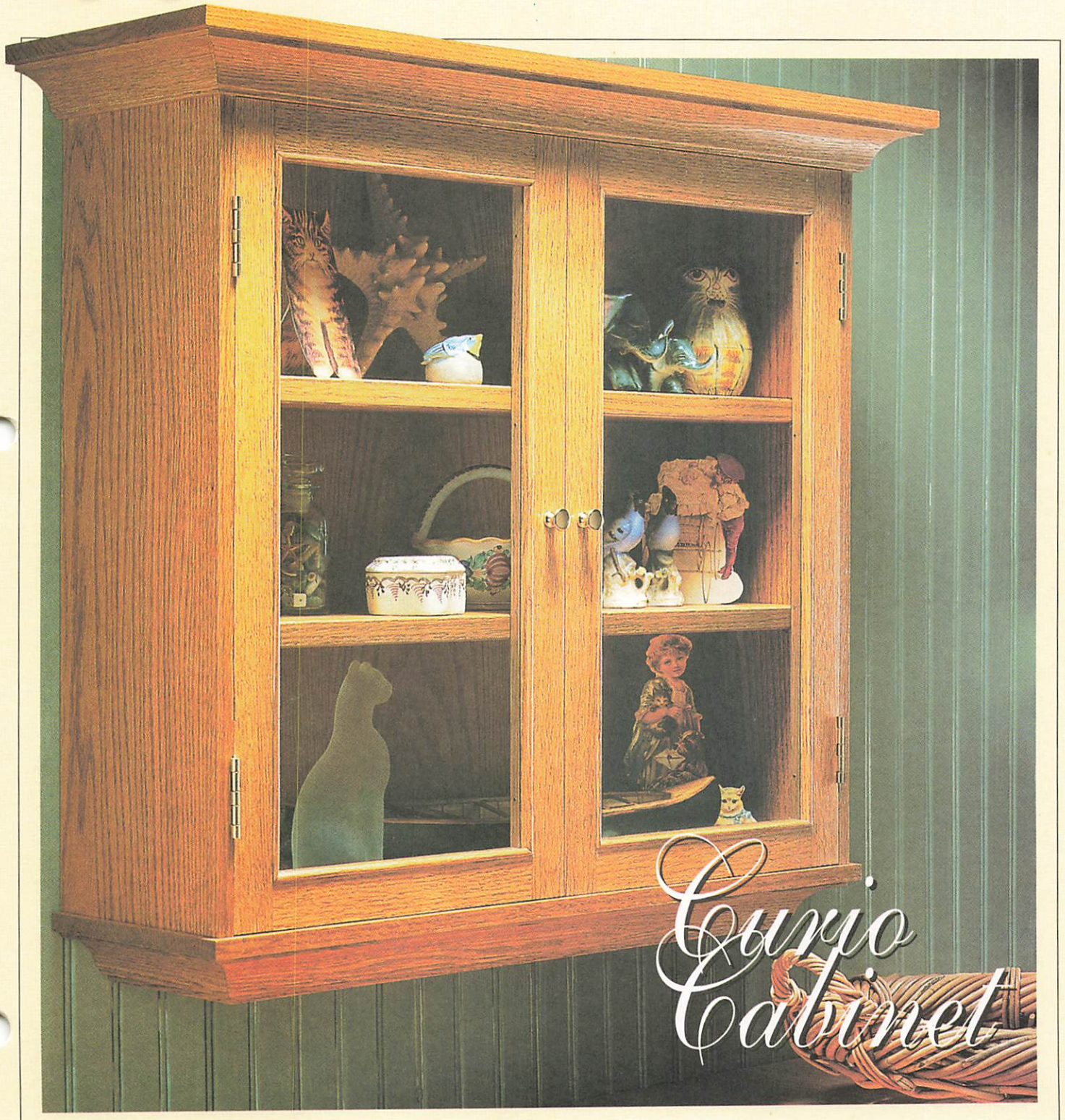

Woodsmith

No. 113 October, 1997

Publisher Donald B. Peschke
Editor Terry J. Strohman
Associate Editors Jon Garbison, Vincent Ancona
Art Director Todd Lambirth
Senior Illustrators David Kreyling, Dirk Ver Steeg, Mike Mittermeier

CREATIVE RESOURCES

Creative Director: Ted Kralicek • *Project Developer:* Ken Munkel • *Sr. Project Designer:* Kent Welsh • *Project Designers:* Ted Wong Jr., Kevin C. Boyle • *Shop Manager:* Steve Curtis • *Shop Craftsman:* Steve Johnson • *Photography Dir.:* Lark Smothermon • *Senior Photographer:* Crayola England

BOOKS

Executive Editor: Douglas L. Hicks • *Art Director:* Linda Vermie • *Senior Graphic Designer:* Chris Glowacki

CIRCULATION

Subscriber Services Director: Sandy Baum • *New Business Director:* Glenda K. Battles • *New Business Manager:* Todd Bierle • *Renewal Manager:* Paige Rogers • *Billing Mgr.:* Rebecca Cunningham • *Assistant Subscription Mgr.:* Joy Krause • *Promotion Assistant:* Rick Junkins • *Associate Graphic Design Director:* Susie Rider • *Sr. Graphic Designer:* Cheryl L. Simpson

CORPORATE SERVICES

Vice President of Planning and Finance: Jon Macarthy • *Controller:* Robin Hutchinson • *Sr. Account.:* Laura Thomas • *Accts. Payable:* Mary J. Schultz • *Production Dir.:* George Chmielarz • *Production Assistant:* Susan Dickman • *Electronic Pub:* Douglas M. Lidster • *Production Artist:* Jon Snyder • *Pre-press Image Spec.:* Troy A. Clark • *New Media Manager:* Gordon C. Gaippe • *Web Site Art Director:* Gene Pedersen • *Network Administator:* Al Barnes • *I.S. Support Assistant:* Chris Harrison • *H. R. Director:* Joyce Moore • *H.R. Assistant:* Kirsten Koele • *Admin. Assistant:* Julia Fish • *Receptionists:* Jeanne Johnson, Sheryl Ribbey • *Special Projects Dir.:* Saville H. Inman • *Building Maint.:* Ken Griffith

WOODSMITH MAIL ORDER

Operations Director: Bob Baker • *Materials Mgr:* Mark Mattiussi • *Customer Service Mgr.:* Jennie Enos • *Warehouse Supr.:* Nancy Johnson • *Buyer:* Linda Jones • *Technical Service Rep.:* Matt TeRonde • *Oper. Assist.:* Tammy Aldini • *Team Leader:* Karla Eslinger • *Cust. Serv. Reps.:* Anna Cox, Margo Petrus, Tammy Truckenbrod, Nancy Downey, Adam Best, Deborah Rich • *Warehouse:* Chuck Carlson, Sylvia Carey, Larry Prine

WOODSMITH STORE

Manager: Dave Larson • *Assistant Manager:* Paul Schneider • *Sales Staff:* Pat Lowry, Jerome Herr, Wendell Stone, Jim Barnett, Kathy Smith, John Johnson • *Office Manager:* Vicki Edwards

Woodsmith® (ISSN 0164-4114) is published bimonthly (Feb., Apr., June, Aug., Oct., Dec.) by August Home Publishing Company, 2200 Grand, Des Moines, IA 50312.

Woodsmith® is a registered trademark of August Home Publishing.
Copyright© 1997 August Home Publishing Company. All rights reserved.

Subscriptions: Single copy: $4.99. One year subscription (6 issues), $24.95. (Canada/Foreign add $5 per year, U.S. funds.)
Periodicals Postage Paid at Des Moines, IA and at additional offices.
Postmaster: Send change of address to *Woodsmith*, Box 37112, Boone, IA 50037-2112.
Subscription Questions? Write to *Woodsmith*, P.O. Box 842, Des Moines IA 50304-9961 or call 1-800-333-5075, 8:00 am to 5:00 pm, Central Time, weekdays.
E-Mail: woodsmith@woodsmith.com
World Wide Web: http://www.woodsmith.com

Printed in U.S.A.

EDITOR'S COLUMN

SAWDUST

Quite often when designing a project, we start with a rough concept of what we want the project to look like. Then we proceed to work out the details.

But with two of the projects in this issue, we took a different approach. We started with a specific detail, and then we designed a project around it. For each of these projects that detail was a piece of decorative molding.

The funny thing is that I stumbled across this idea almost by accident. Let me explain. Several months ago I was at a local building center, buying some materials to work on my house. (I like to go out early on Saturday morning and spend a little time just looking around before things get busy.)

Before long, I found myself in the millwork section of the store. It's where they keep the fancy molded stock used to trim the interior of a house. As I was looking at all the different styles of molding, it occurred to me that it might be interesting to try some of this pre-made molding on a woodworking project. And that's just what we did.

CURIO CABINET. One of the pieces of molding was a strip of oak *cove* molding. It was just what I needed for a special project that I'd been planning to build — a curio cabinet.

DISPLAY SHELF. The other project in this issue that uses pre-made molding is the display shelf on page 16. But this time we used a wide piece of ornate crown molding to give the shelf a distinctive look.

SHAKER WALL CLOCK. There's one other project in this issue that uses molding — the Shaker Wall Clock on page 28. But the difference here is the molding is "built-in" not applied. The top and bottom of the clock case and the inside edges of the doors all have a molded edge. If this sounds complicated, don't worry, it's really quite simple. These molded edges can be made easily with a table saw and a router.

TENTH ANNIVERSARY

I stopped by the *Woodsmith Store* the other day to check out some new woodworking tools. (I know, it's starting to sound like I spend too much time around tools and lumber.) Anyhow, while I was there I got to talking to Dave Larson (the store manager). He reminded me that the *Woodsmith Store* is celebrating its ten year anniversary this fall.

Some of you may remember reading about the opening of the store way back in *Woodsmith* Issue No. 53. There have been a lot of improvements over the years. The store has doubled in size. And it now offers just about anything a woodworker could want. So if you're in the area on October 2nd, 3rd, and 4th, be sure to stop in.

Congratulations to everyone at the *Woodsmith Store* — you've done a great job!

Terry

A LOOK INSIDE

CONTENTS

Features

Curio Cabinet 6

Inset glass doors and pre-made cove molding are a couple of the distinctive features of this wall-mounted cabinet. And if you prefer to make your own molding, we've even included step-by-step instructions on how to do it.

Fitting Inset Doors 12

With inset doors, the goal is to end up with an even gap between the door and the cabinet. Here's an article that will show you how.

Display Shelf 16

Got a few extra hours? We'll show you how to turn a piece of pre-made crown molding into a great-looking shelf.

Fitting Crown Molding 20

Installing crown molding may sound complicated. But don't worry, we've designed a simple jig to help make it easy. And we take you through the process, step-by-step, from start to finish.

Saw Blade Rack 22

Here's something that every woodworker can use — more storage space. Our handy saw blade rack mounts to the wall and its unique angled sleeves hold and protect up to five blades.

Molded Bridle Joint 26

This unique joint is similar to a traditional bridle joint with one important difference — it has a built-in molded edge.

Shaker Wall Clock 28

With its classic design and traditional joinery, this handsome, Shaker-style clock is sure to become a treasured heirloom. Ours includes a quartz-movement with real chimes.

Departments

Tips & Techniques 4
Talking Shop 19
Shop Notes 24
Sources 35

Curio Cabinet *page 6*

Display Shelf *page 16*

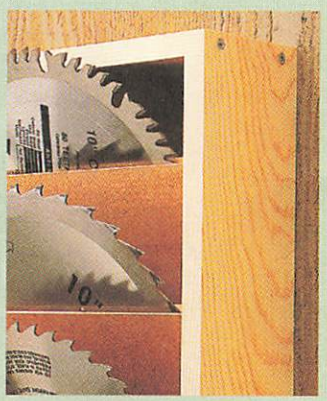

Saw Blade Rack *page 22*

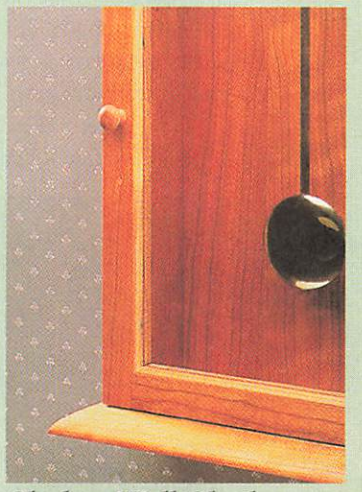

Shaker Wall Clock *page 28*

TIPS & TECHNIQUES

Multi-Purpose Sawhorses

I don't have room in my shop for a separate finishing area or assembly table. So instead, I made a couple of simple modifications to my sawhorses.

First, I made some removeable pads to fit on the top of my sawhorses. These pads are wrapped with carpet so they won't scratch the surface of a project while I'm finishing it, see photo. Dowels on the bottom of the pads fit into holes drilled in the tops of my sawhorses, see drawing at right and detail 'a'.

The second thing I did was to screw an L-shaped bracket to the side of each sawhorse, see detail 'b'. The brackets help to hold sheets of plywood so I can cut them down to a more manageable size. Because the plywood is held vertically, I don't have to stretch to cut all the way across the sheet.

I also use the brackets and an old piece of plywood as a backer board when I need to spray a project with a coat of paint or finish.

Larry Heinonen
Burlington, Michigan

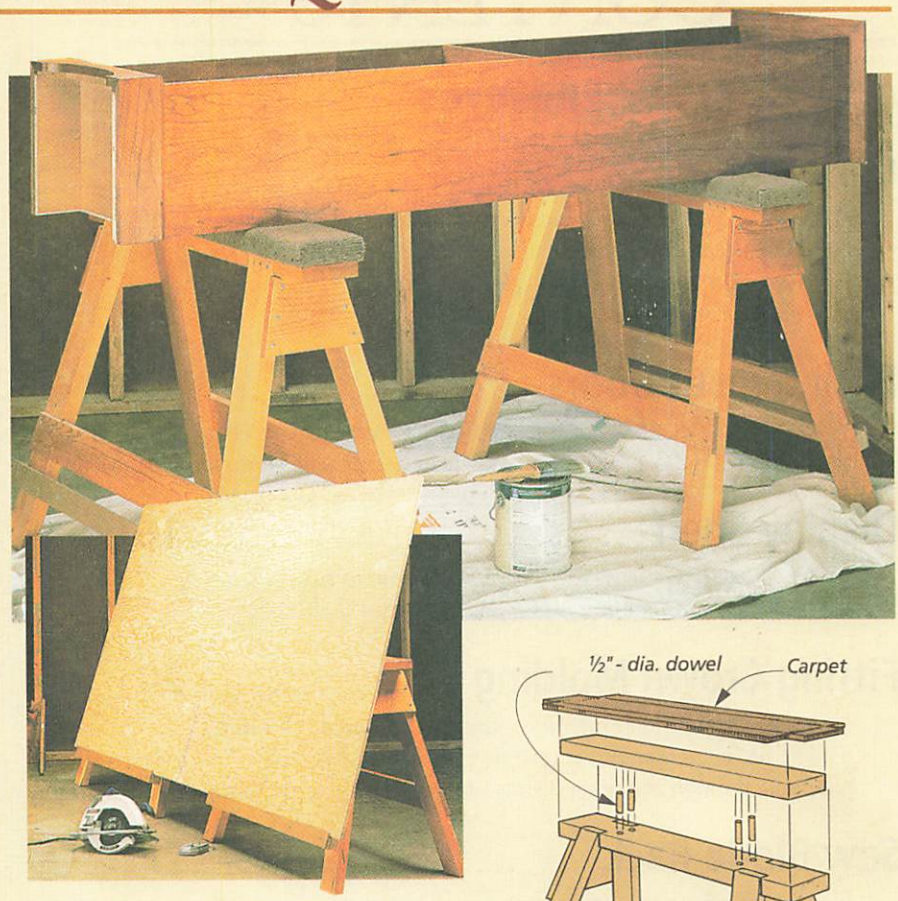

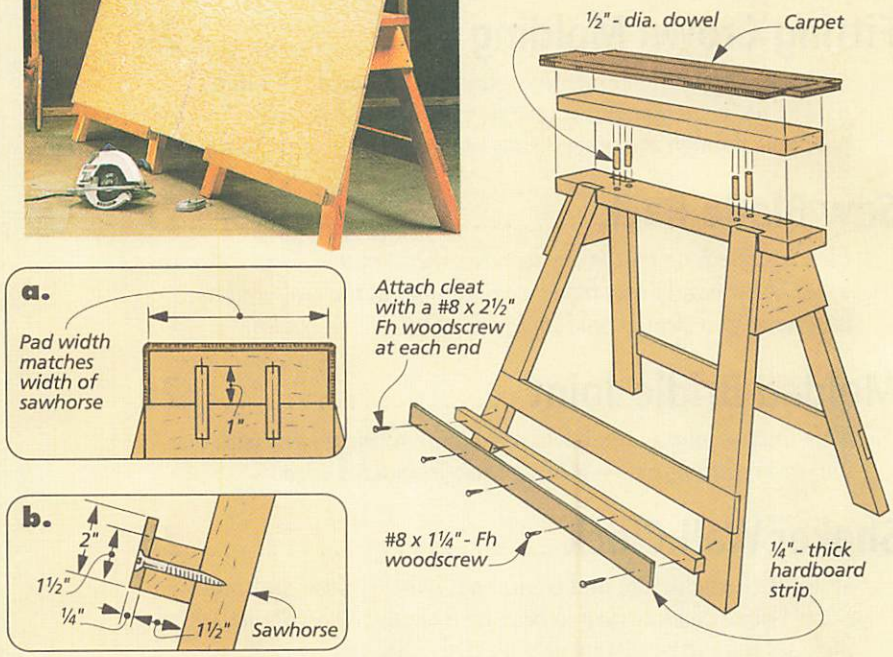

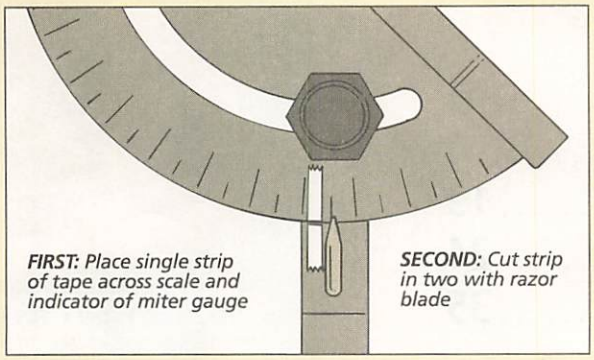

Miter Gauge "Bookmark"

When cutting miters, I sometimes need to change my miter gauge to a different setting, but then return to my original angle. To do this, I use a piece of tape as a "bookmark" to remember my original setting.

I just place a small strip of adhesive tape across the scale and indicator of the gauge, see drawing at left. Then using a razor blade, I cut the tape in two.

When I need to return to this setting, all I have to do is adjust the miter gauge so the strips of tape line up.

Peter Sherril
Forestville, Wisconsin

Scroll Saw Sander

I enjoy making scroll saw projects, but one of my least favorite tasks is sanding a workpiece after cutting it out on the scroll saw. Sanding the outside edges is fairly easy, but trying to work sandpaper into all the tight inside corners and curves can be frustrating.

One afternoon I came up with the idea of using my scroll saw as a sander. I attached a narrow strip of adhesive-backed sandpaper to a piece of thin cardboard.

Then I secured the cardboard and sandpaper to a scroll saw blade by wrapping the ends with tape, see detail 'a'. (For strength, I used the widest scroll saw blade I could find.)

With the blade mounted in my scroll saw, I can sand into all the tight recesses of my scroll saw projects, see drawing at right.

Lionel Fishman
Reno, Nevada

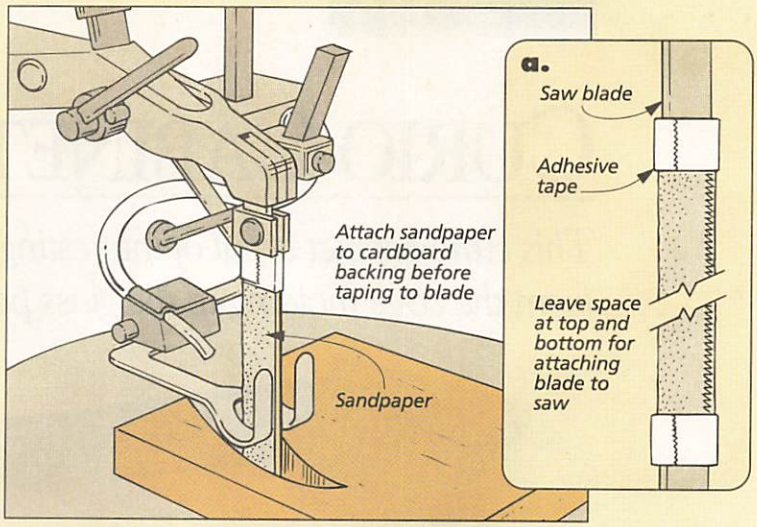

Cord Wraps

I try to reuse and recycle as much as I can. Recently, I found a great use for all those empty plastic caulk tubes I always seem to have lying around.

I clean out the inside of the tubes and cut them in sections to use as cord wraps. The plastic is more durable than cardboard tubes, and it flexes easily to slide over the cord.

But best of all, I can get several wraps from one tube, so I always have plenty on hand if one gets lost or wears out.

Robert Villavicencio
Bakersfield, California

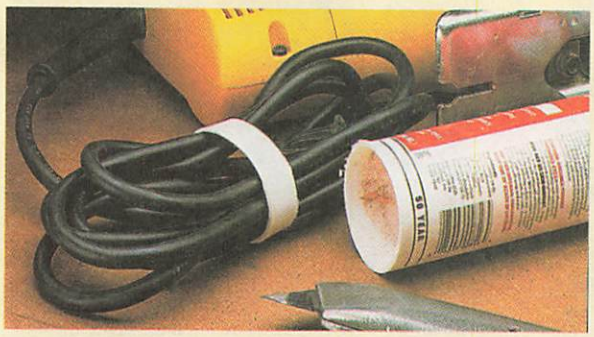

Magnetic Clamp Pads

Whenever I use bar clamps, I place a block of wood between the clamp and my workpiece to prevent denting the surface of the wood. The problem is trying to hold the block in place while tightening the clamp.

To solve this, I simply made some magnetic clamp pads. I just drilled a shallow hole in the center of a block of wood. Then I epoxied a small magnet into the hole, see drawing.

The magnet holds the block in place, leaving me with both hands free.

John S. Nutter
Apopka, Florida

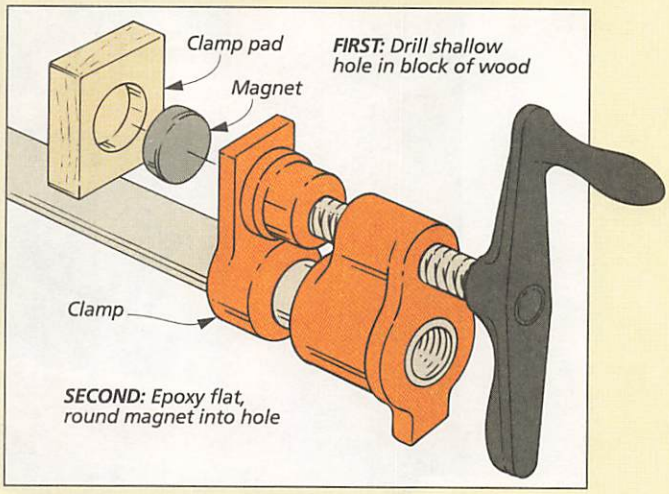

QUICK TIPS

HAIR PICK FILTER CLEANER

I find that the pleated filters I use in my shop vacuum tend to get clogged with dust and debris.

To solve this problem, I use an ordinary plastic hair pick. The long fingers of the pick dislodge the packed debris from between the pleats without damaging the filter.

Dave Drzewiecki
Spring Valley, California

NO-FOG SAFETY GLASSES

Every now and then, I have trouble with my safety glasses fogging up while I'm working. But during a recent visit to an eyeglass store, I discovered an anti-fog cleaning solution for glasses. I tried it on my safety glasses and haven't had a problem since.

Harry Brooks
Freeland, Michigan

SUBMIT YOUR TIPS

If you would like to share an *original* shop-tested tip, send it to: *Woodsmith,* Tips and Techniques, 2200 Grand Avenue, Des Moines, Iowa 50312. Or if it's easier, FAX it to us at: 515-282-6741. Or use our E-Mail address: woodsmith@woodsmith.com.

Include a brief explanation and sketch or photo. If your tip is published, you'll receive $30 to $150, depending on the published length. And don't worry, we'll rewrite the tip and redraw the art, if necessary. Also, *please* include a daytime phone number.

FEATURE PROJECT

CURIO CABINET

This curio cabinet is full of interesting features that deserve a closer look — from the cove molding to the glass panel doors joined with bridle joints.

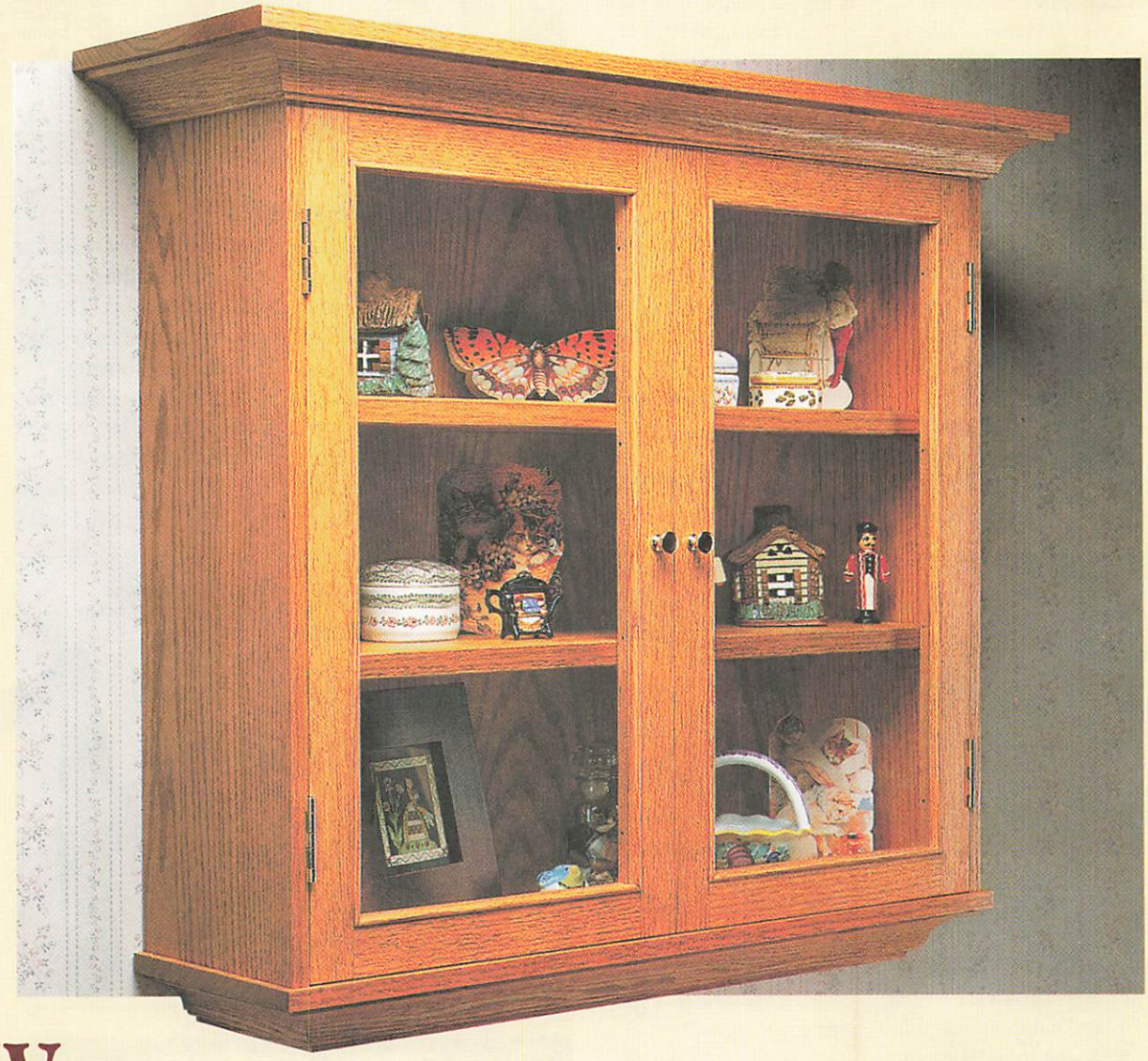

With any curio cabinet, you hope people appreciate the "curiosities" that are on display. But as a woodworker, you also want them to be a little inquisitive about the cabinet itself.

This curio cabinet has a couple features I particularly like. For instance, when adding the cove molding at the top and bottom of the cabinet, I used pre-made molding, which is readily available at many lumberyards and home centers.

Getting a tight fit for this cove molding requires a cut that's angled in two directions: a compound miter cut. But we've come up with a technique that will simplifiy the setup, see the crown molding article on page 20.

But what if you want to build the cabinet out of cherry or walnut, and the molding isn't available in this type of wood? One simple solution is to build your own. This cove molding isn't difficult to make. And we've included instructions for making it yourself on page 11.

The molding isn't the only feature I like about this cabinet. The doors also include some interesting joinery — you just can't see it until you open them up. For these doors, we used a bridle joint, see the exploded view at right. A bridle joint features an open mortise and a tenon. And what's nice is that everything can be done on the table saw with a simple tenon jig.

Construction Details

OVERALL DIMENSIONS:
27⅝"W x 25"H x 8¾"D

CROSS SECTION

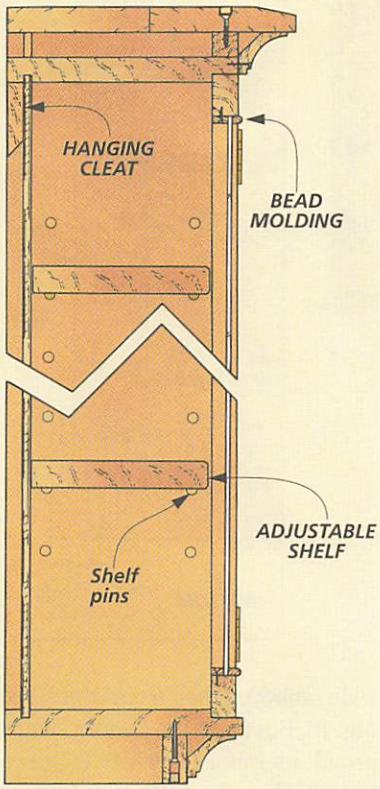

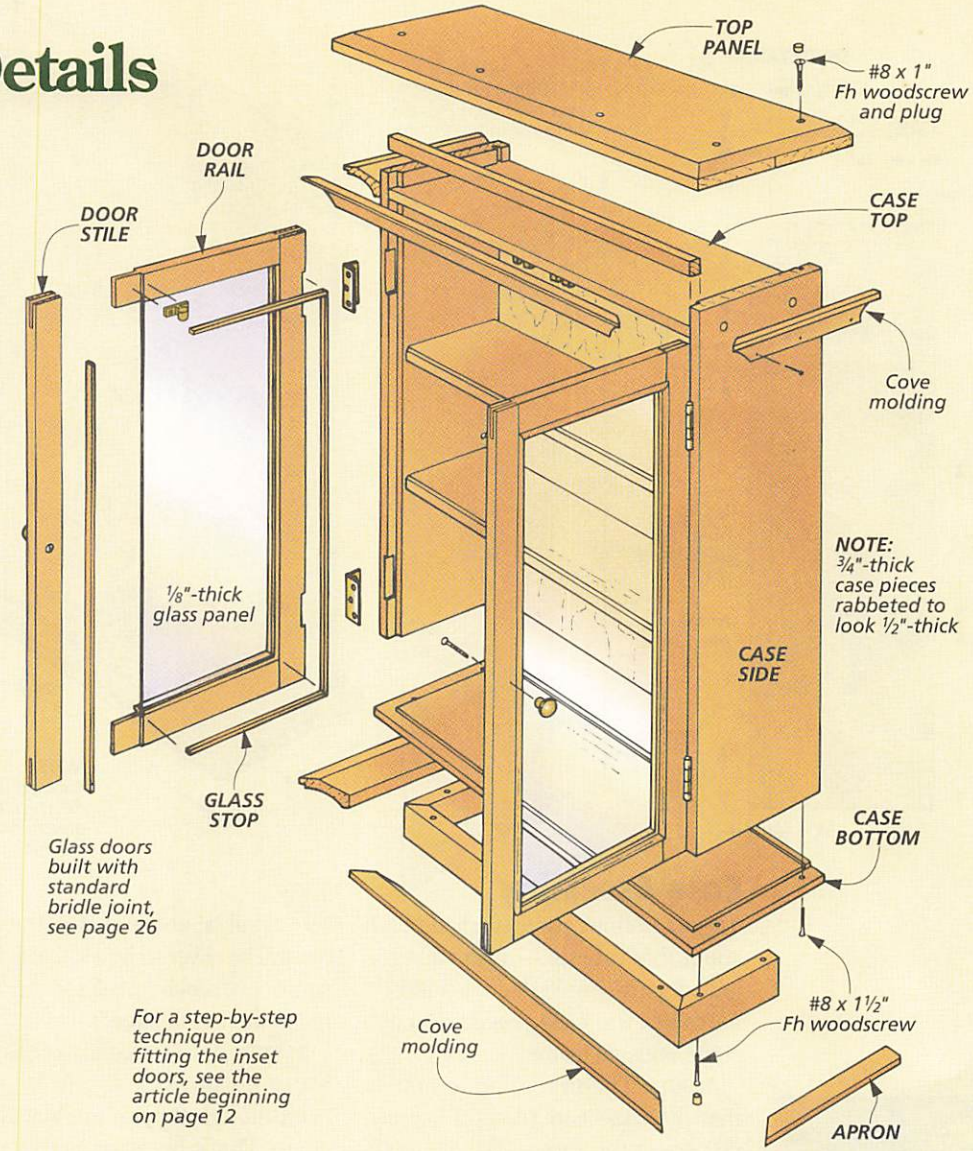

For a step-by-step technique on fitting the inset doors, see the article beginning on page 12

SUPPLIES

- (15) #8 x 1½" Fh Woodscrews
- (6) #8 x 1" Fh Woodscrews
- (8) Spoon-style Shelf Pins
- (13) ⅜"-dia. End Grain Plugs
- (1) 2" Cove Molding (8 Ln. Ft.)
- (44) #17 x ¾" Wire Brads
- (2 pr.) 1⅜" x 2" Brass Butt Hinges
- (24) #5 x ⅜" Fh Woodscrews
- (2) ⅛" x 9" - 18⅜" Glass Panels
- (2) ⅝"-dia. Brass Knobs
- (2) Double Ball Catches

MATERIALS

A	Case Top (1)	¾ x 7 - 23⅛	**H**	Side Aprons (2)	¾ x 1½ - 5½
B	Case Bottom (1)	¾ x 7¼ - 24⅝	**I**	Shelves (2)	¾ x 5⅜ - 22½
C	Case Sides (2)	¾ x 7 - 22¼	**J**	Door Stiles (4)	¾ x 1¼ - 21 rgh.
D	Case Back (1)	¼ ply. - 23 x 20⅞	**K**	Door Rails (4)	¾ x 1¼ - 11 9/16 rgh.
E	Filler Strip (1)	¾ x ¾ - 23⅛	**L**	Bead Molding (1)	¼ x ⅜ - 60 ln. in.
F	Top Panel (1)	¾ x 8¾ - 27⅝	**M**	Glass Stops (1)	¼ x ⅜ - 60 ln. in.
G	Front Apron (1)	¾ x 1½ - 21⅛	**N**	Wall Cleats (2)	½ x 2 - 22⅝

CUTTING DIAGRAM

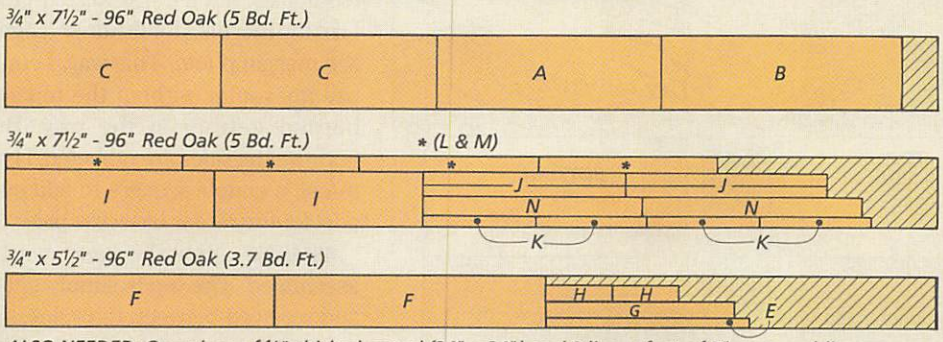

ALSO NEEDED: One piece of ¼"-thick plywood (24" x 24") and 8 linear feet of 2" cove molding.

▲ *To build this curio cabinet, we used pre-made molding, which is commonly available in a variety of styles and woods. Or you can make your own, see page 11.*

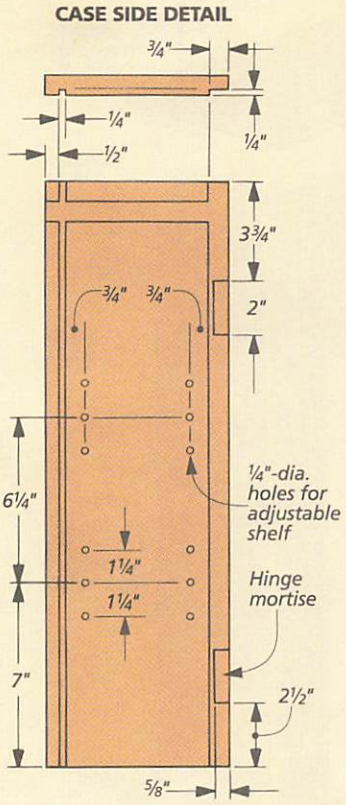

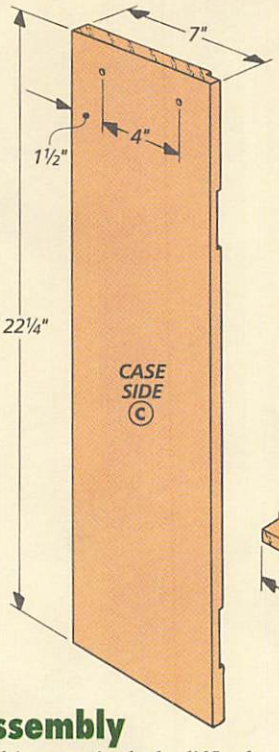

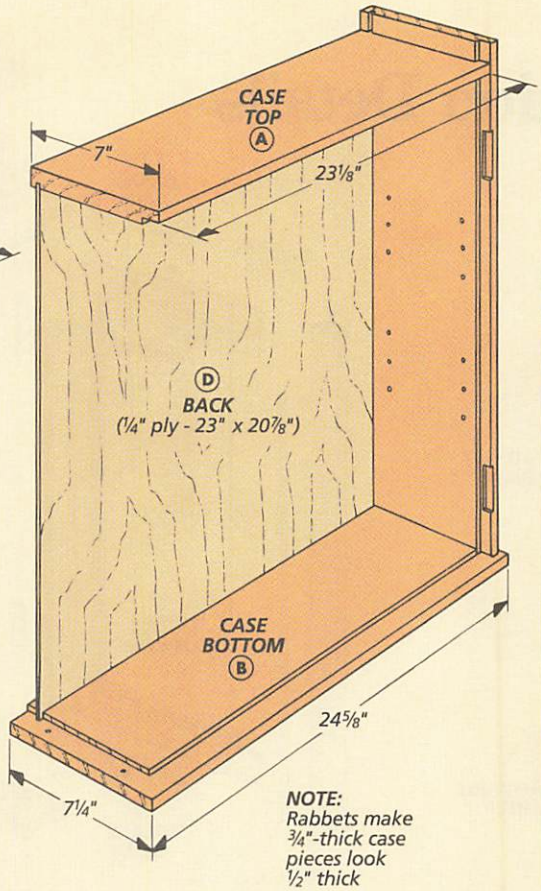

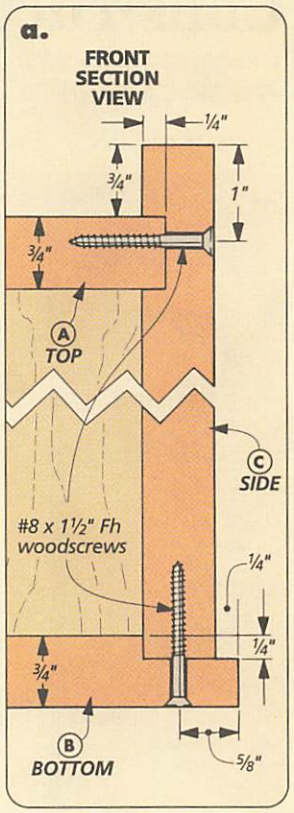

Case Assembly

There's nothing particularly difficult about this cabinet — everything is joined with simple dadoes and rabbets. But the case pieces do have some unusual features.

DADOES. The first thing to note is that the **case top (A)** and **bottom (B)** aren't the same size, see drawing above. The bottom sticks out 1/4" at the front and sides of the case. And the top is a "false" top. Instead of sitting on top of the case, it's trapped in 1/4"-deep dadoes cut in the **sides (C)**, see detail 'a' above. Later, the case top will be covered by a top panel and some cove molding, refer to the drawing at the top of page 9.

RABBETS. Another feature of this case is that the pieces look only 1/2" thick even though they're made with 3/4" stock. That's because there's a 1/4"-deep rabbet on the front edge of each piece, see drawing above and Fig. 1.

Although the rabbets are the same depth, they're not the same width. The case top and sides have a 3/4"-wide rabbet on their front edges, see Fig. 1a. But since the bottom stands proud, its rabbet is wider (1"), see Fig. 1b. Plus, the rabbets are cut on both the front and side edges.

GROOVES. After cutting all the rabbets on the case top, side, and bottom pieces, I cut a 1/4"-deep groove near the back of each piece to hold a 1/4"-thick plywood back, see drawing and detail in upper left margin. Then I dry assembled the case and cut a **case back (D)** to fit in the grooves.

SIDES. At this point, the case could be assembled, but it's easier to do a little work on the sides first. The sides need a series of 1/4"-dia. holes. These are for some shelf pins that will support two shelves added later.

After the shelf holes were drilled, I cut the mortises for the door hinges, see margin photo. This way, I could use my router without the top and bottom getting in the way. But because the sides are rabbeted, I had to use a couple spacers to add support for the router base, see page 25.

ASSEMBLY. Now the case can be assembled. The top is simply glued and screwed between the sides, see detail 'a' above. And the bottom panel is glued and screwed to the sides.

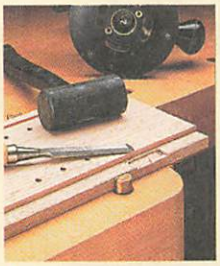

▲ *Shop Tip: It's much easier to rout the hinge mortises in the side pieces before you assemble the case.*

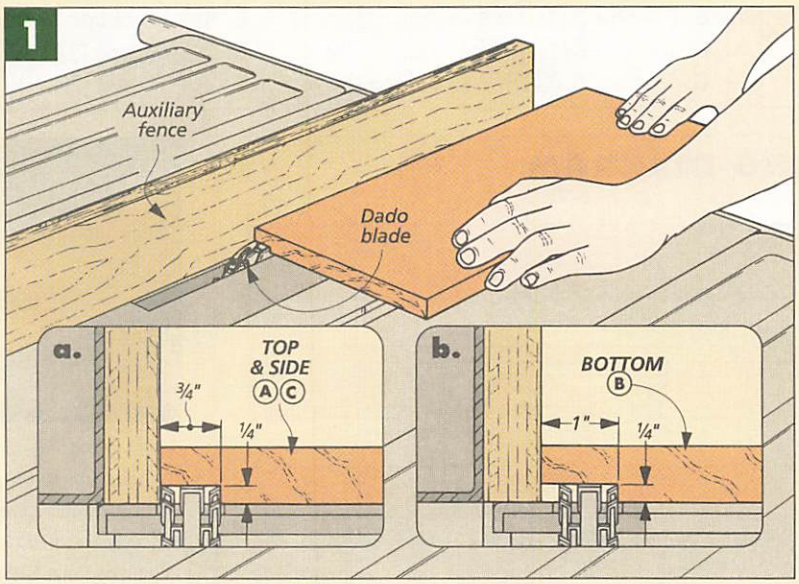

Top & Molding

With the case complete, I turned my attention to the top panel, see drawing at right. But before you can work on the top, a filler strip needs to be added. This gives you something to screw into when attaching the panel.

FILLER STRIP. The **filler strip (E)** fits between the rabbets in the case sides and is sized so it's flush with the top of the sides, see drawing and detail 'a'. (Mine was 3/4" thick.) Then the strip is simply glued to the case top (A).

TOP PANEL. Now a **top panel (F)** can be glued up from 3/4"-thick stock. I sized mine to overhang the case 1 3/4" on the front and sides, see detail 'a'. (Mine was 8 3/4" x 27 5/8".) Note: After the cove molding is added, the top will only overhang the molding 1/4".

Next, I beveled the top face to match the "thickness" of the case pieces (1/2"), see Figs. 2 and 2a. To do this, tilt the blade 11° and add a tall auxiliary fence for support.

BOTTOM APRONS. With the top panel screwed to the cabinet and the screw holes plugged, the next step is to add aprons to the bottom of the case, see drawing. These support the cove molding added at the bottom.

The **front (G)** and **side aprons (H)** are ripped 1 1/2" wide so they're 1/4" deeper than the molding, see detail 'b'. Then they're mitered to length so they set 1 3/4" in from the edge of the case. (Mine were 21 1/8" and 5 1/2" long.)

With the aprons screwed in place, I added the cove molding. I used premade molding for this cabinet, but you can make your own, see page 11. Like crown molding, cove molding sits at an angle, so it requires a compound miter cut. For more on fitting this molding, see page 20.

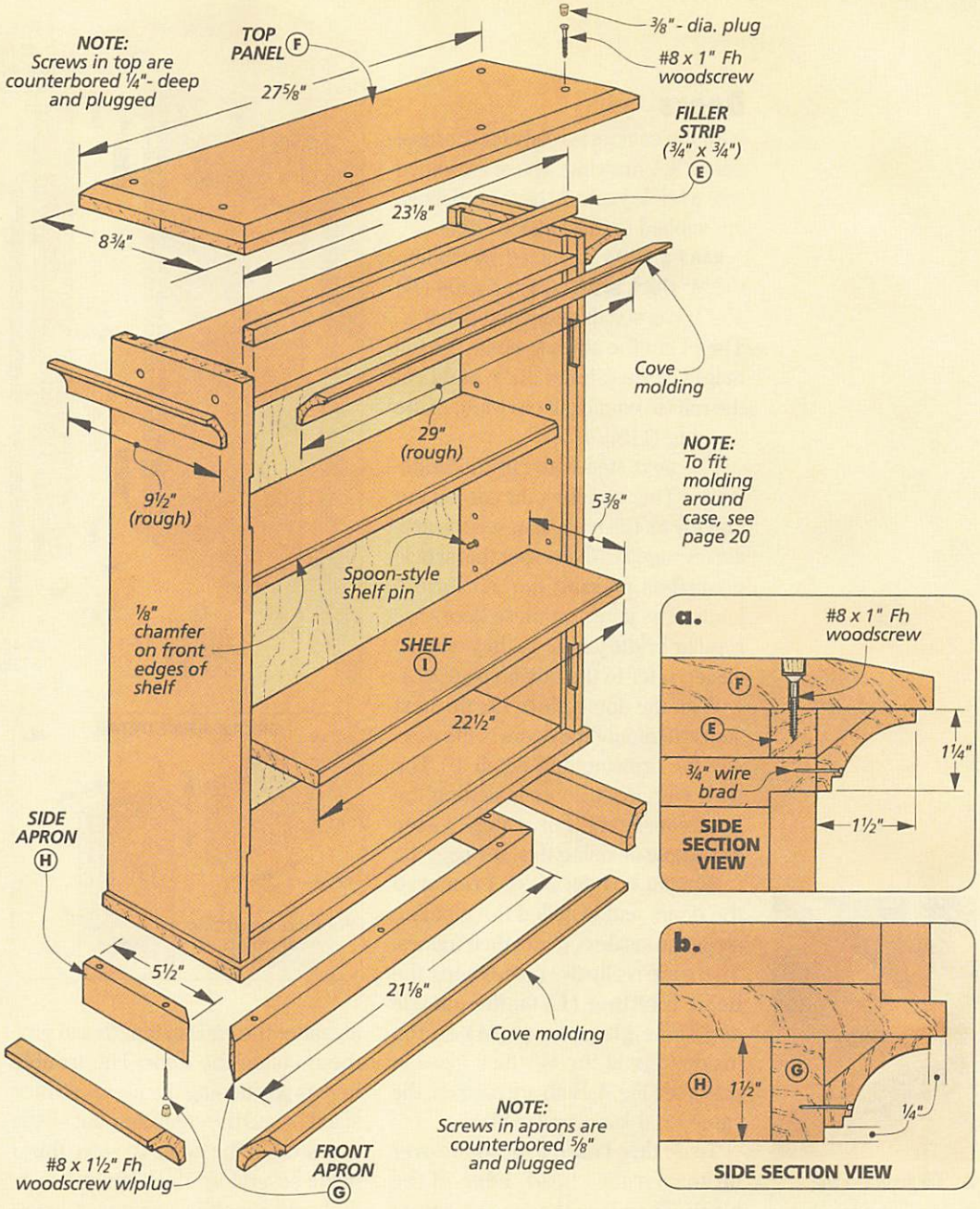

To attach the molding, I used glue and brads for the front pieces. But to allow the sides of the case to expand and contract, I applied glue only near the front corners and simply tacked the molding in place at the back.

SHELVES. Before beginning the doors, I cut two **shelves (I)** to fit inside the case, see drawing above. I sized them to allow a 1/16" gap at each side (22 1/2" long), and they stop 1/8" short of the rabbets in front (5 3/8" wide). Finally, I softened both front edges of the shelves with a slight (1/8") chamfer.

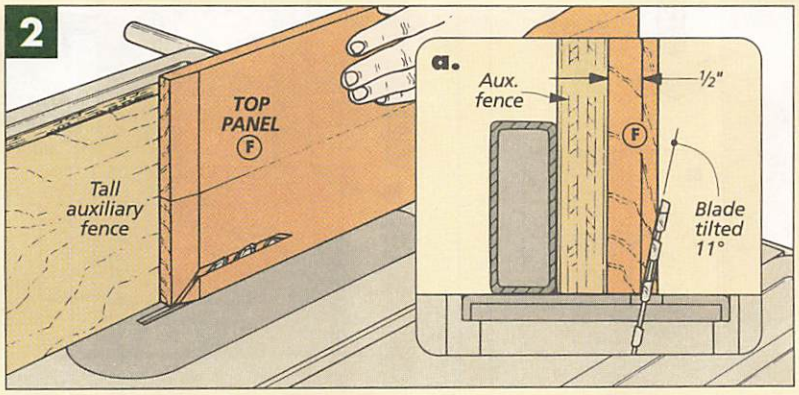

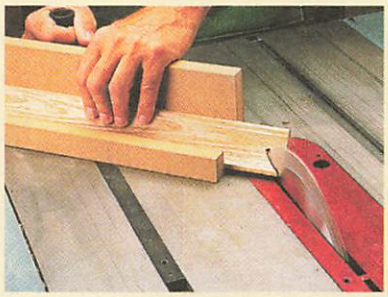

▲ *To cut the compound miters for the molding, I made a sled to hold the piece at an angle, see page 20.*

Doors

Now the cabinet is ready for the inset doors, see drawing. These are joined with a bridle joint and have bead molding applied to their inside edges.

RAILS & STILES. I started by ripping the ¾"-thick **stiles (J)** and **rails (K)** 1¼" wide, see drawing and detail 'a'. Then I cut the stiles to equal the full height of the cabinet (21"). And I cut the rails to equal half the width of the opening (11 9/16").

The next step is to cut the bridle joints. This simple joint can be cut quickly on the table saw, see the article on page 26. (Note that this article describes making *molded* bridle joints. The joints on these doors are regular bridle joints, so they're even easier, refer to the box on page 27.)

With the doors glued up, the next step is to mount the doors in the case, see the drawing and detail 'b'. The trick with inset doors is getting the gaps consistent. For a step-by-step technique on doing this, see page 12.

MOLDING & STOPS. Next, I removed the doors and installed the molding along the inside edges of their frames. There are really two pieces here: the **bead molding (L)** on the outside and some **glass stop (M)** on the inside to hold the ⅛"-thick glass in place, see Fig. 4. Both are cut from the same ¼"-thick oversize blank.

To do this, I used a ⅛" round-over bit to rout the "bead" edge of the blank. Then I set the fence ⅜" from the blade and ripped off the molding and the stop, flipping the blank between passes, see Fig. 3.

To install the bead molding, simply miter the ends to length and glue them inside the door. The trouble here is positioning the pieces so they stand proud the same amount all the way around the door. To solve this, I made several ½"-thick spacers to fit under the molding as it was being glued in place, see photo in margin. (This allows for the ⅛"-thick glass and ⅜"-wide glass stop.)

Before adding the glass and the stops, I finished the entire cabinet. First, I stained it with a golden oak stain. Then I applied a few coats of a wipe-on finish.

WALL CLEATS. All that's left now is to hang the cabinet, see Fig. 5. To do this, I made two **wall cleats (N)**, each with one edge beveled 45°. One piece is screwed to the wall, while the other is glued to the back edge of the cabinet, see Fig. 5a.

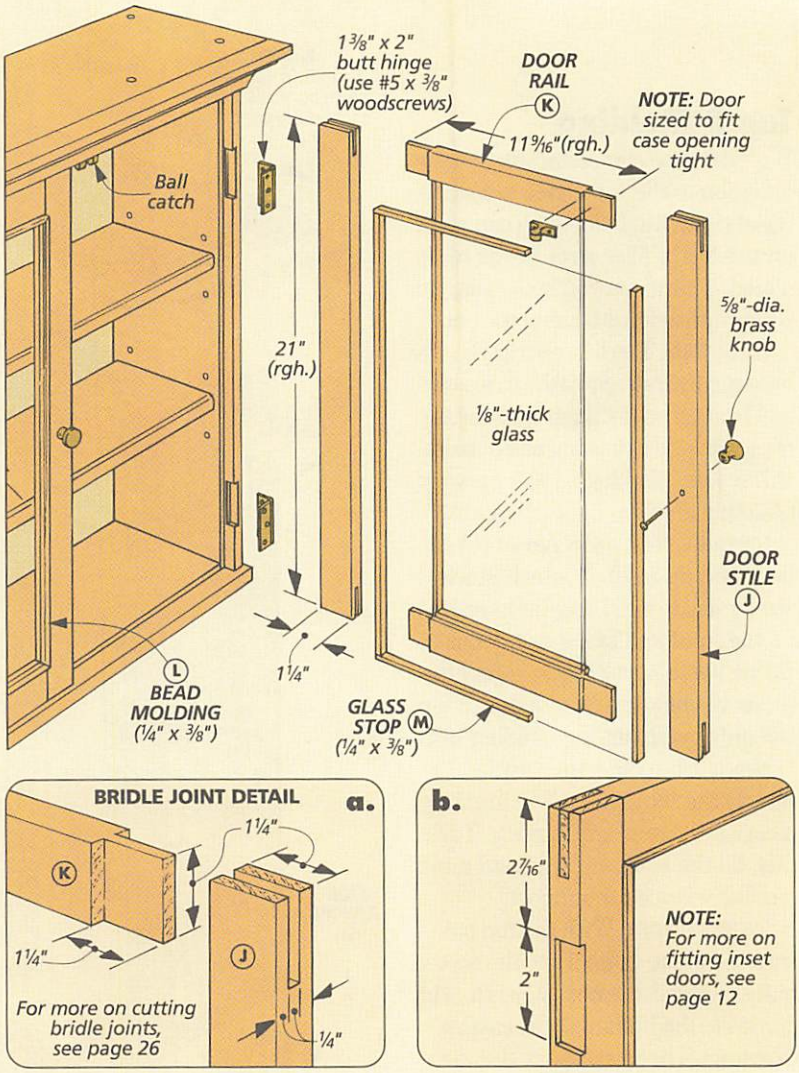

▲ *To position the bead molding when gluing it to the doors, I used ½"-thick spacers.*

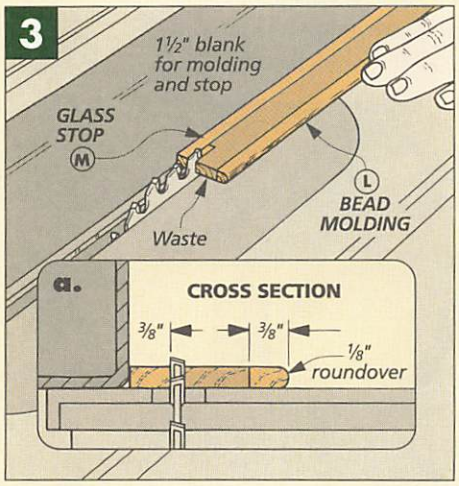

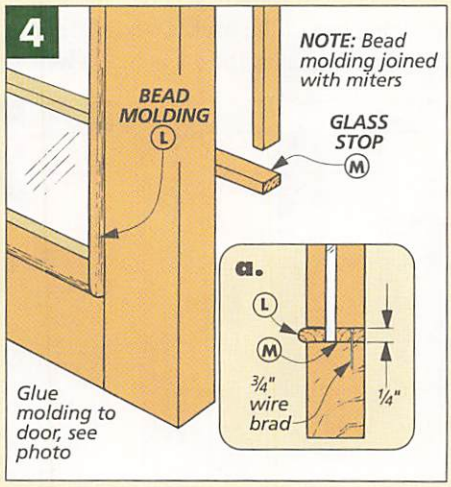

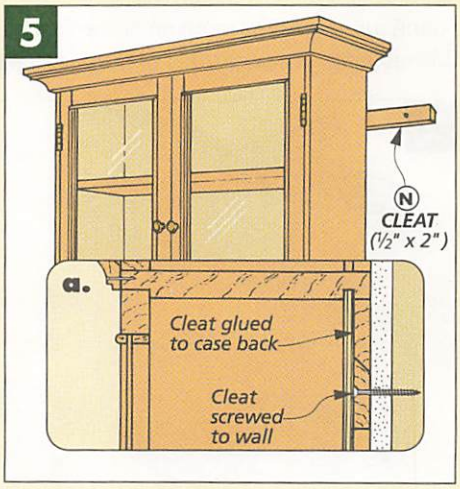

SHOP-MADE COVE MOLDING

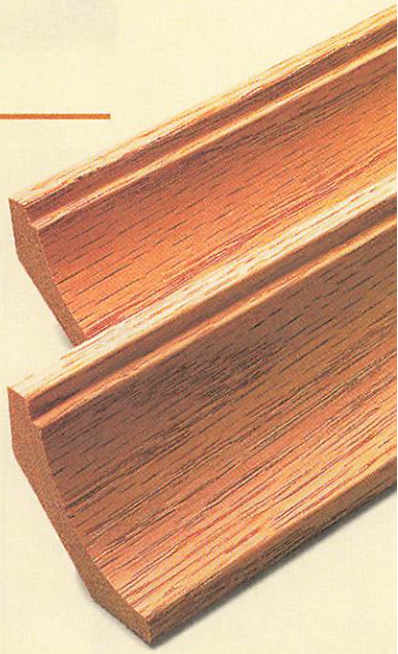

When adding the cove molding to the cabinet, I decided to use pre-made molding. But if you want to make your own molding or don't want to be limited in your choices of wood (moldings are usually oak, pine, or poplar), all you need is a table saw.

To make this molding, I started off with several 5/8"-thick blanks that are cut 2 3/8" wide. (To end up with enough molding, make at least 8 linear feet.)

COVE CUTS. The next step is to cut the cove. This is done by pushing each blank across the saw blade at an angle, see Figs. 1 and 2. I'll admit this looks a bit odd, but the thing to keep in mind is that you're taking very light passes, raising the blade no more than 1/16" with each pass.

To cut this profile, I started with the blade at its final height (5/16"), see Fig. 2a. Then I carefully positioned a fence behind the saw blade at a 30° angle and clamped it in place 1/4" from the back of the blade, see Fig. 1.

Now lower the blade and cut the cove in a series of light passes, raising the blade until there are 1/4"-wide shoulders on either side of the cove, see Fig. 2a. (If you end up with uneven shoulders, simply flip the blank end-for-end and make another pass.)

BEVEL CUTS. With the cove cut, all that's left is a series of bevel cuts with the saw blade tilted 45°, see Figs. 3 and 3a. Shop Tip: It's easier to sneak up on the final cuts if you lay out the bevels on the end of one of the blanks.

With the bevels cut, the next pass establishes the shoulder along the bottom edge, see Fig. 3b. The trick is to position the fence so the blade is just short of the corner that rests on the table. Then raise the blade until it creates a 1/8"-wide shoulder.

When the shoulder is created, I made one last pass, cutting the piece to final width, see Fig. 3c. (The molding should be 1 1/4" tall and 1 1/2" wide when attached to the cabinet.)

Now before mitering the molding to length, all you need to do is sand the cove and the shoulder to remove any saw and burn marks. W

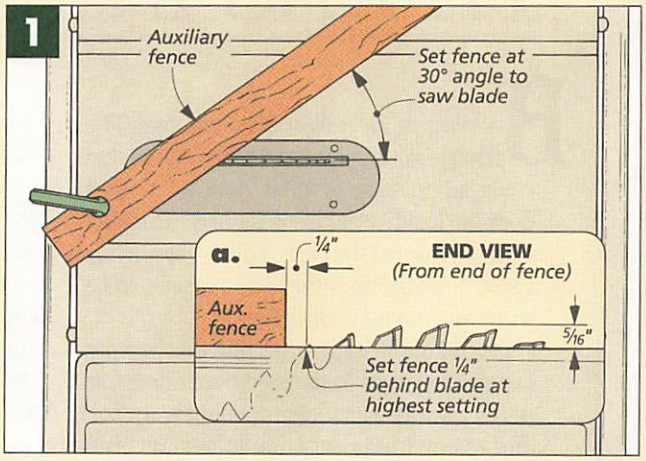

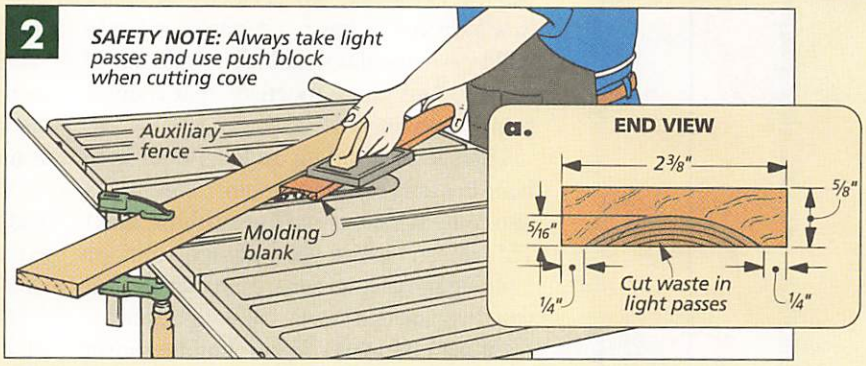

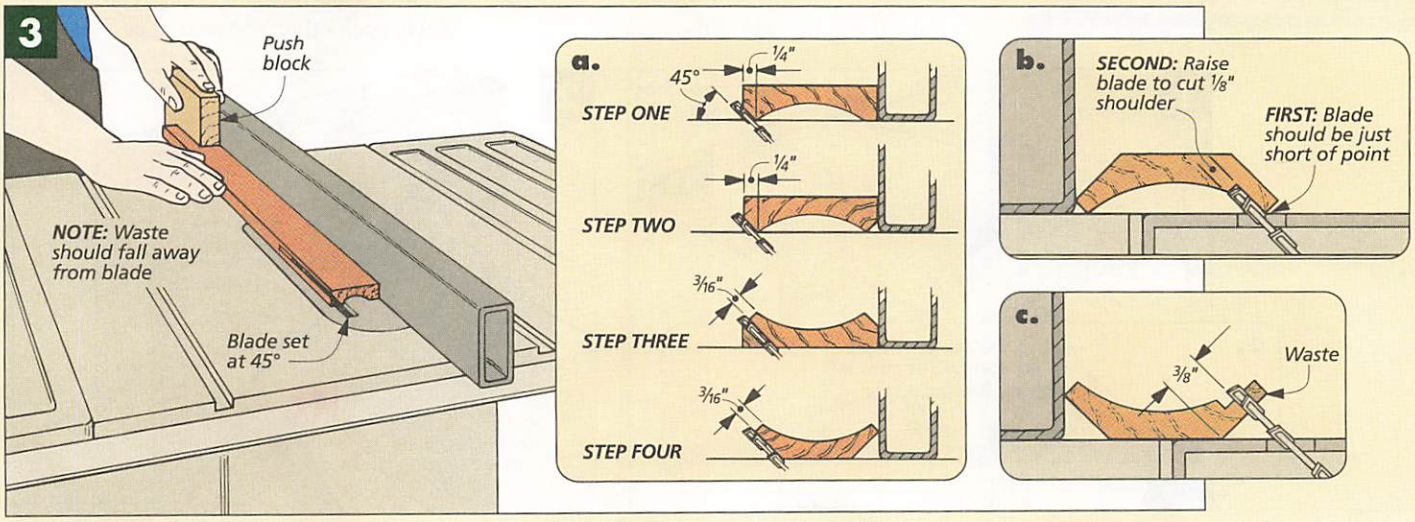

FITTING INSET DOORS

Building an inset door is no big deal. The trick is getting it to fit. Unlike doors that cover an opening (overlay doors), an inset door fits inside. And it's designed to fit flush with the front of the case. This creates a tiny gap around the door that looks great — *if* its width is even and consistent.

As you might expect, getting this narrow, consistent gap is easier said than done. In a perfect world, every case opening is square, and every hinge mortise is perfect. But woodworking is rarely perfect. No matter how long you've been at it, you're going to build case openings that are a little out of square. And hinge mortises that require some "tweaking."

The secret to fitting an inset door is to build in a little breathing room. (A few tricks also come in handy, but I'll get to those later.) This doesn't mean you shouldn't aim for building the case as square as possible. But you don't have to worry if it's slightly off.

BUILDING THE DOORS. When building inset doors, I start by sizing them to fit the case opening tight. This way, I can trim the door to the "shape" of the opening and still have enough left over to shave off what I need to create the consistent gaps later.

When measuring for the doors, keep in mind that cases can rack quite a bit. So to allow for this, I first sit the project upright on a level surface. Then I measure the case opening, looking for the largest dimension in both its height and width. These determine the initial size of the doors.

Shop Tip: It's next to impossible to mount a twisted door properly. It's almost easier to build a new door. So to end up with a flat door, I check it carefully when it's *dry* assembled. Sight down the door and check the top and bottom edges to make sure they're parallel, see Fig. 1. If the door is twisted, reposition the clamps to try to get it flat.

DETERMINING THE GAP. After the door is assembled, the first thing to do is decide how large you want the gaps around the door to end up. This depends on two things: the size of the door and the time of the year.

I shoot for a 1/16" gap with most small to medium-size doors. But the larger the door, the larger the gap. So sometimes, I'll allow as much as an 1/8" on each side.

Of course, if it's winter, I'll make the gap a hair or two wider so the door has room to expand in the summer. And if it's summer, I'll make the gap slightly narrower.

TRIMMING THE DOOR. Even though I know what size I want the gaps to be, at this point I don't try to cut the doors to final size. Instead, I trim them just enough to match the shape of the case opening.

To do this, first check the diagonals, see Fig. 2. If the diagonals are the same, then the opening is square, and the door can be mounted in the case, see page 14. More than likely though, one or two edges of the door will need to be tapered. To figure out which edges to trim, I measure the case opening carefully to find out which edges are *not* parallel to each other, see next page.

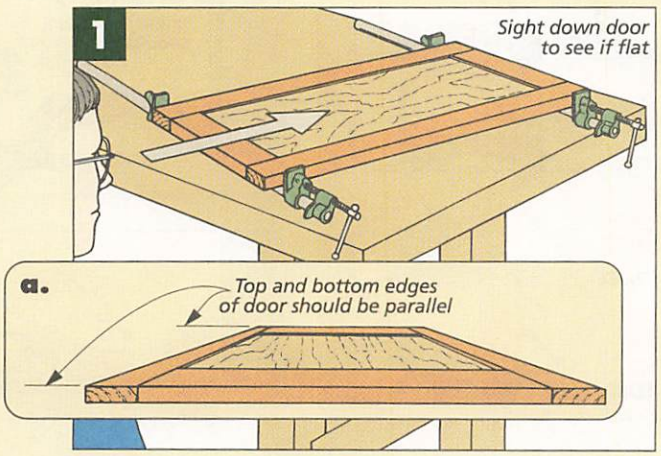

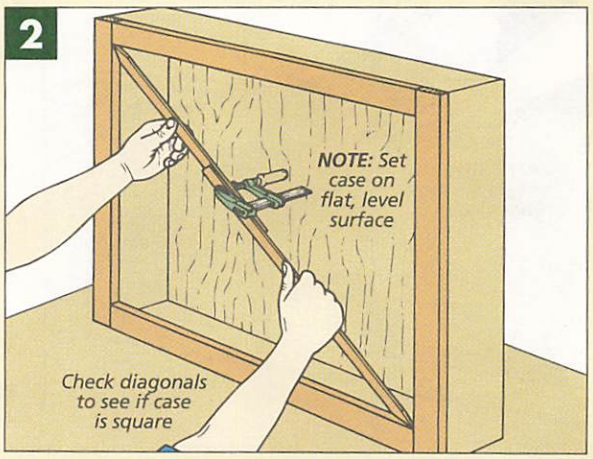

Trimming the Door: SIDES NOT PARALLEL

Sometimes, the top and bottom edges of a case opening are parallel, but the sides are not, see drawing at right. When this happens, the top and bottom of the door will work fine as they are, but the side of the door (the one that will be hinged to the case) needs to be tapered to match the case side.

This taper in the side of the case will probably be very gradual, so it won't be easy to see. But all you need to do is set the door in the case and slide it against the side. The door will hit at the top or bottom first. And the unwanted gap on the opposite end will show you just how much you need to taper the stile on the door.

To lay out the taper on the side of the door, I measure the unwanted gap and then transfer this measurement to the opposite end of the hinge stile, see Fig. 3. It's also a good idea to draw out the taper using a pencil and a straightedge. This way, it will be much easier to see what you're doing when trimming the edge of the door.

The goal here is simple. You want to get the hinge stile to fit tight all along the side of the case. At this point, you're not worried about creating the gaps at the top and the bottom of the door. Those will be created after you get the door hung inside the case.

To taper the stile on a long door, you can use a hand plane or jointer. For a shorter door, I prefer to use the table saw, see Fig. 4. First, I set the rip fence to equal the width of the door. Then to establish the angle of the taper, I tape a tiny shim to the inside edge of the door. (The shim should equal the final width of the taper.) Remember, at this point, the goal is to take off as little material as possible.

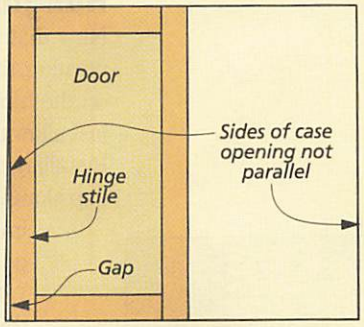

▲ *With the top and bottom edges of the case parallel, the hinge side of the door should be tapered to match.*

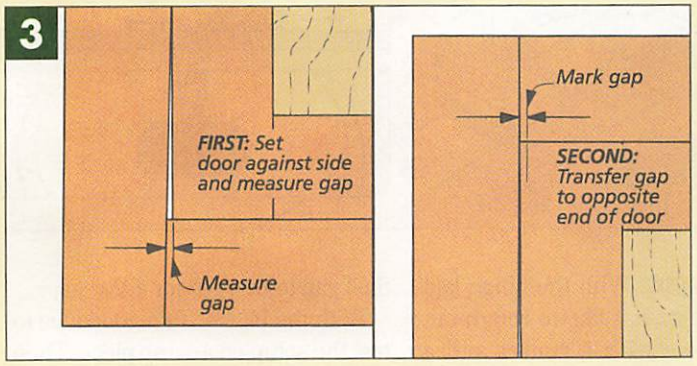

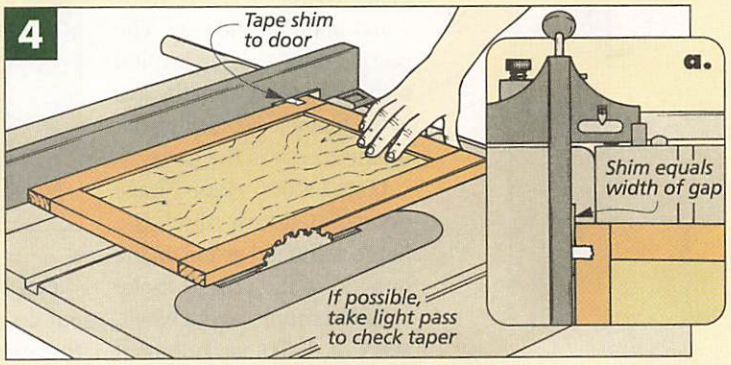

Trimming the Door: TOP & BOTTOM NOT PARALLEL

If the sides of the case are parallel but the top and bottom are not, then I use the side of the door as the "good edge" and trim the top and bottom edges just enough to match the top and bottom of the case, see drawing in margin at right.

The problem here is that the door isn't going to fit into the case. So what I do is lay the case down flat on its back and set the door on top so the hinge stile is flush with the side of the case opening, see Fig. 5. Next, I center the door top-to-bottom. Then to mark the tapers that need to be made on the top and bottom edges, I reach inside and trace the edges of the case onto the door, see Fig. 5.

Now, the top and bottom edges can be trimmed. Here again, I like to use the table saw, but this time, the taper will be cut using the miter gauge and an auxiliary fence, see Fig. 6.

As with the situation above, the goal at this point isn't to create the gaps at the top and bottom. All you want to do is get the top and bottom edges of the door parallel to the top and bottom edges of the case. The gaps will be created later — after the door is hung inside the case.

However, there is one gap you need to allow for at this point. The hinge stile on the door needs to be trimmed 1/16" (or so) to equal the gap you want between the door and the side of the case.

The reason you need to do this now is that after the door is mounted, you'll only be able to trim the stile at the center. And you don't want this stile to end up a lot thinner than the hinge stile at the side.

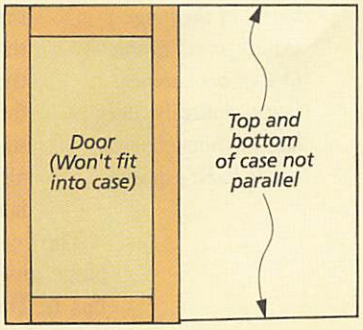

▲ *With the sides of the case parallel, the top and bottom edges of the door should be tapered to match.*

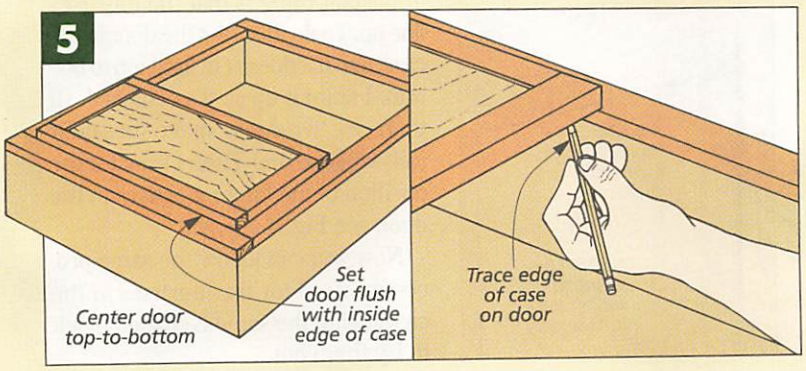

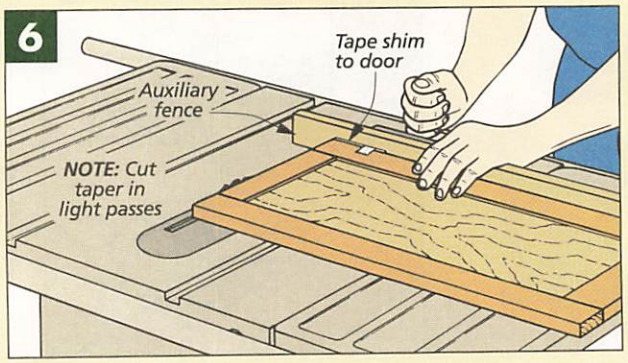

Hanging the Doors

Now that the doors match the case opening, the next step is to hang them on the hinges. This does more than just allow the door to open and close. Installing the hinges also creates the gap along the side of the door. So it's important that the hinges are positioned carefully.

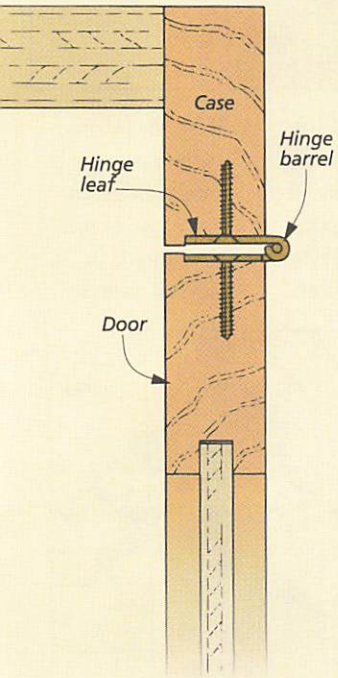

▲ *Traditionally, the full barrel of the hinge stands proud of the face of the cabinet. But technically, only half the hinge barrel needs to be exposed.*

HINGE POSITION. The first thing to do is decide how far the hinge will stick out at the front of the case, see drawing in margin. There are two criteria to keep in mind here. First, at least half of the hinge barrel must be proud of the case. Otherwise the door won't open all the way. The second thing to keep in mind is that you don't want the leaf of the hinge to be sticking out on the *inside* of the case.

LAYOUT BLOCK. After I have determined how much the hinge will stand proud on the outside of the case, I make myself a simple layout block, see Fig. 1. It's an L-shaped block that helps in laying out the position of the hinge on the case and the door. After the top (or bottom) edge of the hinge is marked, it'll locate the other two edges. This way, all the hinge mortises will be laid out exactly the same.

The layout block is simply a scrap piece glued to a hardboard lip, see Fig. 1a. The length of the scrap should match the length of the hinge. And the thickness of the scrap piece determines how much of the hinge will be mortised into the case.

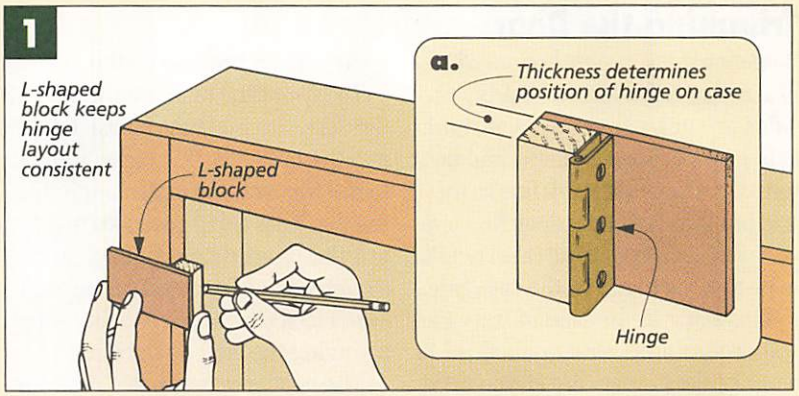

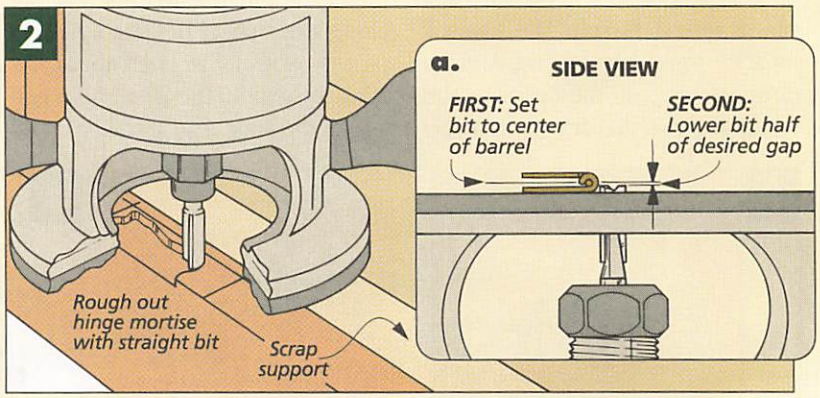

CASE MORTISES. With the hinge laid out on the case, I like to rough out the mortise with a router and a straight bit, see Fig. 2. Later, I'll clean it up with a chisel, see Fig. 3.

The important thing here is setting the bit to the right depth — the depth of the mortises determines the gap between the case and the door.

My first instinct is to make the mortise the same depth as the leaf. But this doesn't always work. The barrel may be too big and you'll end up with a gap that's larger than what you want.

So typically, I use the barrel of the hinge to set up the bit, centering the bit on the barrel, see Fig. 2a. Then I lower the bit half of what I want the final gap to be ($1/32''$ for a $1/16''$ gap).

With the bit set, it's a good idea to test the setup on a scrap piece. Then you can rout the mortise, staying clear of the layout lines.

Note: Working with a face frame here can be a little tricky. The edge of the frame is too narrow to support the base of the router — it will tip easily and gouge the mortise. So I add more support by clamping a thick scrap piece flush with the opening.

All that's left is to clean the mortises with a chisel, see Fig. 3. And to make sure the mortises don't end up too large, stop short of the layout lines and check the fit of the hinge often.

DOOR MORTISES. Now that the hinges in the case are complete, work can begin on the hinges in the door. The important thing is that the mortises line up. To do this, I set the door in the case, and if it doesn't fit tight top to bottom, I shim it up so it's centered. (If there are two doors, make sure their rails will line up.) Then I transfer the position of the hinge mortises to the door, see Fig. 4.

Now you can follow the same procedure used for the mortises in the case, using the same L-shaped block to lay them out.

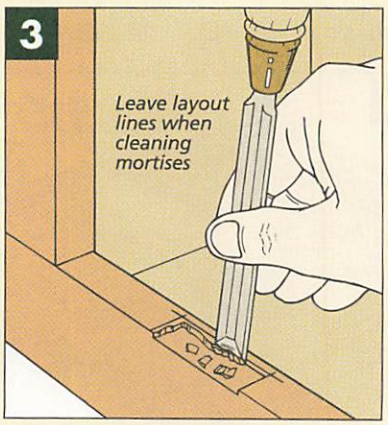

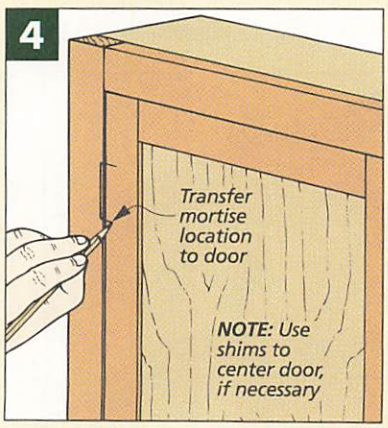

Creating the Gaps

When the mortises for the hinge are done, all that's left is to create the proper gaps around each side of the door. And the first step to doing this is to mount the door in the case.

Since I end up putting on and removing the door several times during this process, I don't want to have to put in and take out twelve screws, so I typically use a single steel screw for each hinge leaf, see box below.

CHECKING THE SIDE GAP. With the door mounted, take a step back and see how it fits. There should be a small, consistent gap along the hinged edge of the door. If there's not, then now's the time to work on it.

If the gap is too wide, then you'll need make the mortises a little deeper. But if the gaps are too narrow or if they're tapered from top to bottom, you can try to correct this by shimming one or both hinges, see box.

TOP, BOTTOM, & CENTER GAPS. When you're satisfied with the gap along the side of the case, the hard work is over. All that's left now is to trim the top, bottom, and center of the door to match the gap at the side.

To do this, first I measure the gap near the hinge, see Fig. 1. Then I mark this dimension on the door, measuring in from the top and bottom edges of the cabinet. (Make at least two marks on each edge so you can connect the marks with a layout line when the door is removed.)

Next, I lay out the gap at the center of the door. To do this, I start by finding the center of the case at both the top and bottom, see Fig. 2. Then from this mark I measure back half of the desired gap and mark this on the door. Again, I marked the top and bottom of the door so I could connect the marks with a straight line later.

TRIMMING TO FINAL SIZE. Now the door can be removed and trimmed to final size. For the top and bottom of the door, I use the table saw and the miter gauge with an auxiliary fence, see Fig. 2. (If the top and bottom edges were tapered earlier, this *won't* be a square crosscut.) When trimming, keep in mind that you'll need to sand the edges to remove any saw marks.

To trim the center stile, I use a hand plane. This way, I'll be sure not to remove too much material. Plus, I won't have to worry about saw marks.

With the door trimmed to final size, all that's left is to mount it to the case, this time using the brass screws. W

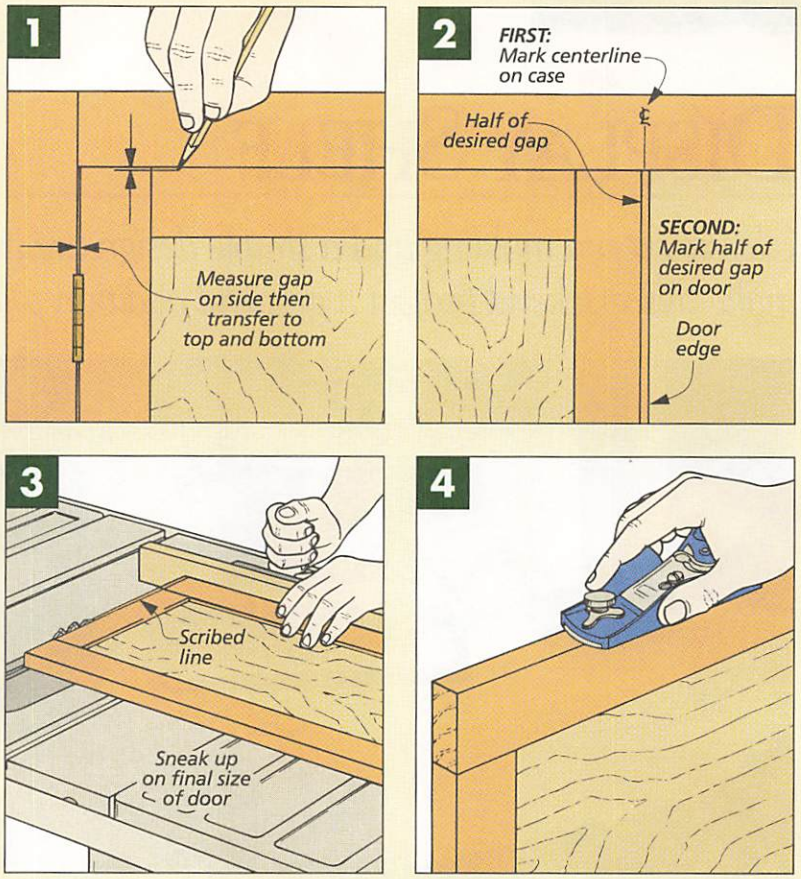

TIPS FOR INSTALLING HINGES

When installing hinges, you need to be ready to make a few adjustments. This can mean putting on and taking off the door a few times. And one thing to avoid is breaking one of the brass screws. So I use a single steel screw to hold each leaf, see left photo. (Use the brass screws after the door fits.) And if the mortise is too deep, I use a thin piece of cardboard as a shim, see right photo.

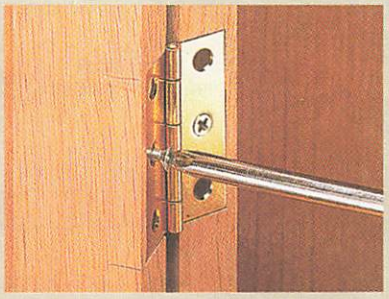

Steel woodscrews. *One frustration you want to avoid is breaking a brass screw. So I put a single steel screw in the hinge leaf when fitting the door.*

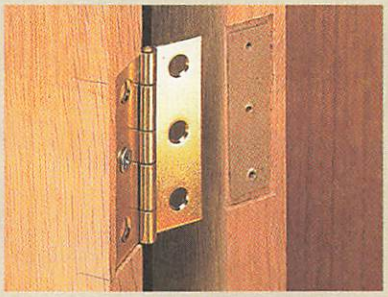

Cardboard shim. *If the gap between the door and the case is too narrow or if the gap tapers from top to bottom, try adding a thin cardboard shim.*

DISPLAY SHELF

Classic crown molding and a simple design are just two of the features that make this weekend project a graceful addition to any home.

Using crown molding is a great way to "dress up" many projects. It can transform a plain, utilitarian piece of furniture into something interesting and special.

Take this wall shelf, for example. By itself, a wall shelf is really nothing more than a board attached to the wall. But by adding crown molding to the front and sides, this shelf takes on a completely different look.

And fitting molding doesn't have to be complicated or difficult. In fact, we used a store-bought crown molding for this project, see photo above. But more on the molding later.

FRAME. The framework of the shelf is really a box that hangs on the wall. But instead of four sides and a top and bottom, this box only has three sides. In place of a back, there's a cleat that is used to hang the shelf on the wall. (For more on this wall hanging system, see page 24).

I started by cutting the **front (A)** and **sides (B)** from 1/2"-thick stock, see drawing below. (Shop Note: I used

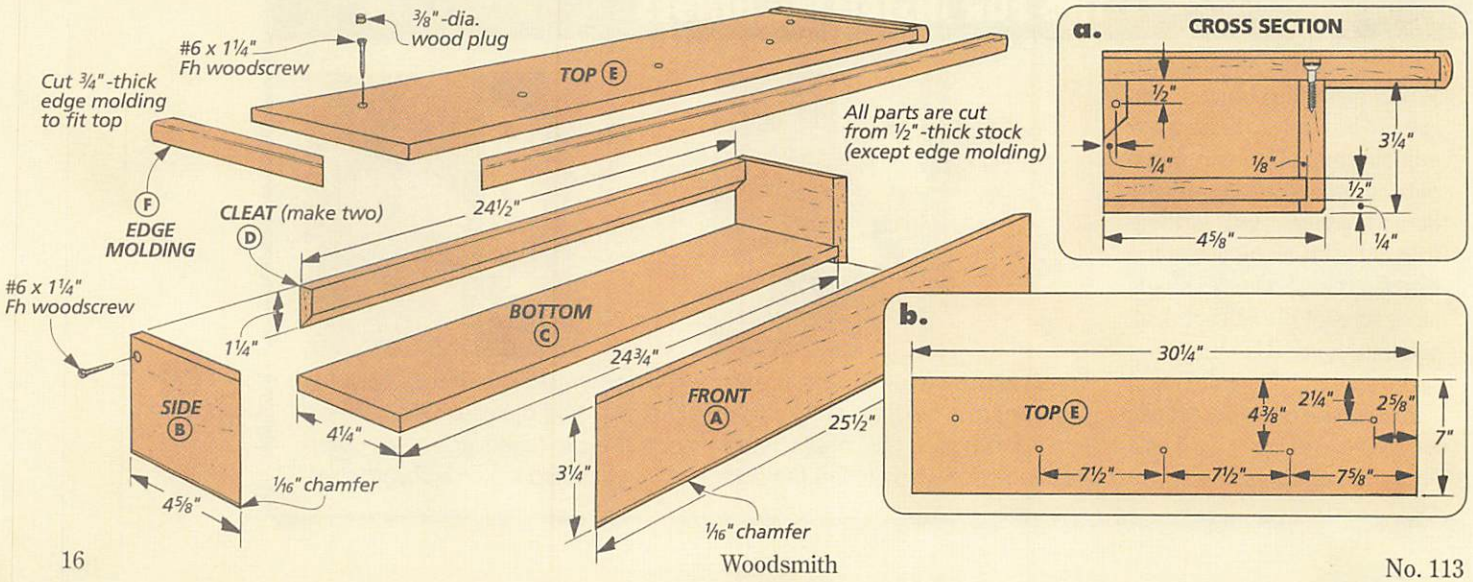

poplar for this project since it takes paint well, see the box on painting the shelf on page 18.) I ripped these pieces to finished width (3½") but left them a little long. Later, they'll be mitered to exact length.

The next step is to cut an ⅛"-deep groove on the inside face of these three pieces to hold a ½"-thick bottom, see detail 'a' on previous page. These grooves are cut on the table saw using a dado blade.

Most of the front and sides of the shelf will be concealed by the crown molding. However, the lower edge of these pieces will still be visible even after the molding is in place. So to soften these exposed edges, I simply routed a 1/16" chamfer along the outside bottom edge of these pieces.

And since the joint between the front and side pieces will also be visible, I wanted to conceal the joinery as much as possible. So I used miter joints to join these pieces. I started by cutting the front piece to final length, mitering both ends.

As for the side pieces, only one end of each piece is mitered. But since the grooves for the bottom are already cut in these pieces, just make sure you miter the correct end so you wind up with a left and right side. Then the sides can be trimmed to final length by squaring up the back ends.

BOTTOM. With the miter joints cut, I dry-fitted the pieces together so I could measure for a **bottom (C)**. This piece is cut to fit between the grooves in the front and side pieces.

Before gluing all four pieces together, I made a **cleat (D)** to fit at the back of the frame between the two sides, see drawing on opposite page. This is simply a narrow piece of stock with a 45° bevel ripped along one edge.

To assemble the frame, I simply glued up the sides and front, trapping the bottom and cleat in between. Then to help hold the cleat in place, I drove a screw through each side into the ends of the cleat.

TOP. The last step to complete the frame is to add a top. I cut the **top (E)** large enough so that it overhangs the frame by 2⅜" at the front and on the sides, see detail 'b' on opposite page. This overhang will provide a place for attaching the crown molding.

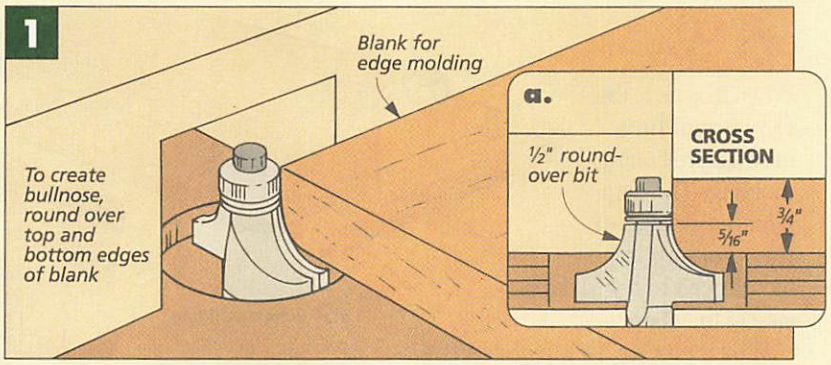

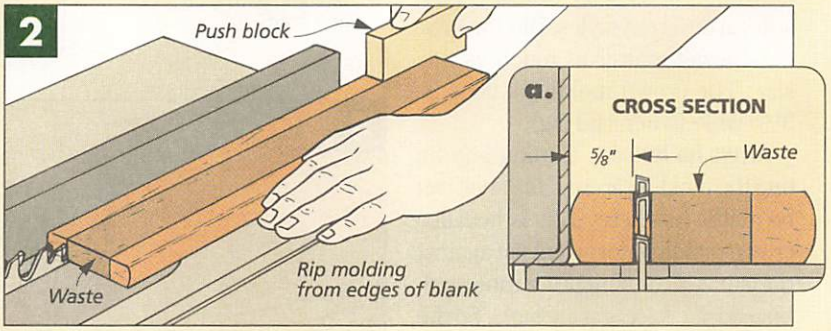

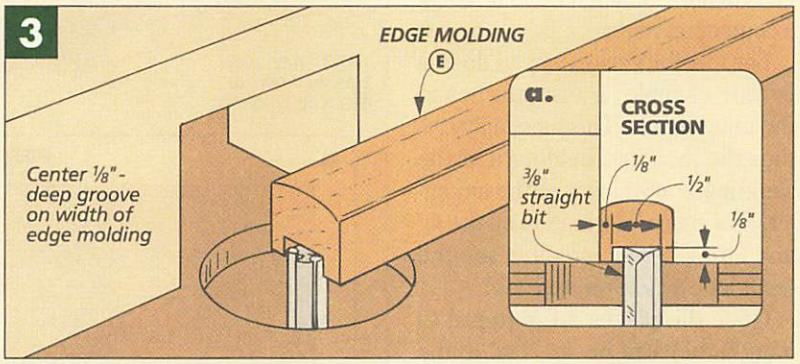

The top is screwed down to the sides and front of the frame. But because I didn't want the screwheads to be visible, I counterbored the screws and plugged the holes.

EDGE MOLDING. With the frame completed, I began work on the molding. The shelf actually uses two kinds of molding — a store-bought crown molding and a shop-made edge molding around the top.

To make the **edge molding (F)**, I routed a bull-nose profile on both edges of a wide, ¾"-thick blank, see Figs. 1 and 1a. (Shop Note: It's safer to use a wide blank instead of trying to work with narrow pieces of stock.)

Then using a push stick for safety, I ripped the edging off both sides of the blank, see Figs. 2 and 2a.

At this point, I could just cut the edge molding to size and glue it straight to the top. But to help keep the edging aligned and create a lip all around the shelf, I routed a shallow groove on the back of the edging, see Figs. 3 and 3a. After mitering the ends of the molding to length, I glued it to the edges of the top.

MATERIALS

A	Front (1)	½ x 3¼ - 25½
B	Sides (2)	½ x 3¼ - 4⅝
C	Bottom (1)	½ x 4¼ - 24¾
D	Cleats (2)	½ x 1¼ - 24½
E	Top (1)	½ x 7 - 30¼
F	Edge Molding (1)	¾ x ⅝ - 48 (rgh.)

Also Needed: 5 lin. feet of 3½" poplar crown molding

SUPPLIES

- (7) #6 x 1¼" Fh Woodscrews
- (2) #8 x 2½" Fh Woodscrews
- #18 Wire Brads for Crown Molding
- (5) ⅜"-dia. wood plugs

When it came to the crown molding, I used a store-bought molding. The complicated profile of this molding is just too difficult to try to duplicate in the shop.

When you go to purchase the crown molding, you'll probably find several different styles. But the profile doesn't matter as much as the size. The crown molding I used is 3½" wide (when laid flat).

FITTING THE MOLDING. Cutting and fitting the molding around the shelf can be a little bit tricky. This is because crown molding doesn't fit flat against the surface to which it's mounted. Instead, it projects at an angle. So the ends of the molding have to be cut at a compound miter.

For me, the easiest way to do this is with a simple jig that attaches to the miter gauge. This jig simply cradles the molding, holding it at the same angle at which it will be mounted. (For more information on the jig and fitting crown molding, see the technique article on page 20.)

Once the pieces are mitered to length, they can be attached to the shelf, see Figs. 4 and 4a. (I found it easiest to do this with the shelf turned upside down on top of my workbench.) The edge molding creates a "lip" for the top edge of the crown molding to rest against, see detail 'a' at top of page. Then to secure the molding, I simply used glue and brads, see drawing.

HANGING THE SHELF. The shelf fits over a second bevel-edged cleat that is screwed to the wall. But to prevent the shelf from slipping off the wall if it gets bumped, I added a lip to the wall cleat, see page 25.

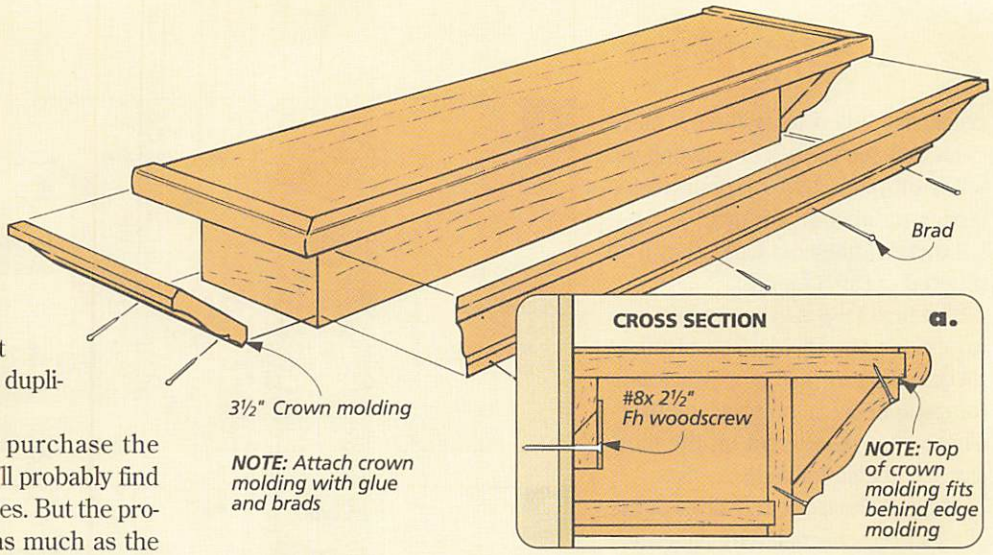

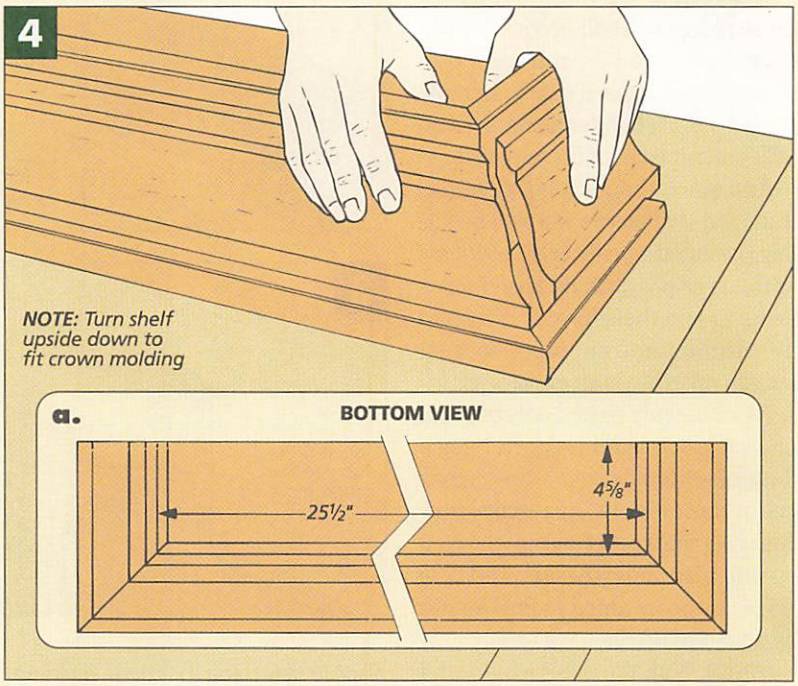

PAINTING THE SHELF

The key to any painting job is preparation. Since paint sticks best to a smooth surface, start by filling all the nail holes with putty. Then carefully sand the entire shelf smooth.

PRIMER. But sanding alone isn't enough to prepare the surface for paint. You'll also need to apply a coat of primer. (I used a white pigmented shellac primer.)

The primer coat serves a dual purpose. It seals the wood to prevent sap from "bleeding" through the paint (this is especially important if you're building the shelf out of pine). And it provides a base for the top coats, allowing the paint to form a protective "film" on the surface of the wood.

When it came to the paint, I used two coats of a semi-gloss latex enamel. This paint provides a tough finish and makes clean-up a whole lot easier.

TALKING SHOP

Cutting Diagrams

Q: What's the purpose of the cutting diagrams you show with your projects, and how are they used?
Steve Gaudin

Essentially, a cutting diagram is designed to give you an idea of how much lumber you'll need for a project. It also shows you an economical way of marking out the pieces on your boards to avoid waste.

The problem is that cutting diagrams only work in a perfect world, where every board is straight and even and free from defects.

PREMIUM LUMBER. In the real world, the closest you can come to finding lumber like this is premium lumber (like *Weyerhaeuser's ChoiceWood*). Although it costs a bit more, this wood is surfaced on all sides and guaranteed to be defect free.

Premium lumber is often available in standard widths and in smaller quantities (some dealers sell it by the inch). So it's an especially good choice if you're building a small project.

SURFACED LUMBER. But most hardwood dealers simply carry boards that are surfaced either on two sides (S2S) or on four (S4S). And in either case, the boards may contain minor defects such as knots or splits.

Other than price (S4S lumber generally costs more), the only difference between the two is that with S2S you'll have to trim the edges yourself. It's kind of like buying a whole chicken breast, bones and all, as opposed to paying a little extra for a breast fillet.

And since you lose some of the wood in the trimming process, it's a good idea to buy more than you need. (I typically buy about 20 percent more wood.)

So what does all this have to do with cutting diagrams? Well, how you use the diagram depends upon the kind of wood you're working with. If you're using premium lumber, all you have to do is transfer the cutting diagram layout to your boards.

But even if you're working with S4S or S2S lumber, a cutting diagram can still serve as a visual reference.

I look at the shape and size of the pieces on the cutting diagram and then start shifting the pieces around mentally to match the boards I have on hand. It's like trying to work a giant jigsaw puzzle.

When it comes to marking out the pieces, I try to follow a couple of tips. First of all, I lay out the larger pieces first. Once this is done, it's easier to fit in all the smaller pieces.

Next, I group similar-sized pieces together so I can make fewer cuts and wind up with less waste.

Finally, I always allow for a little extra length when laying out the pieces. This way I can cut them to rough length initially and trim them to final length later.

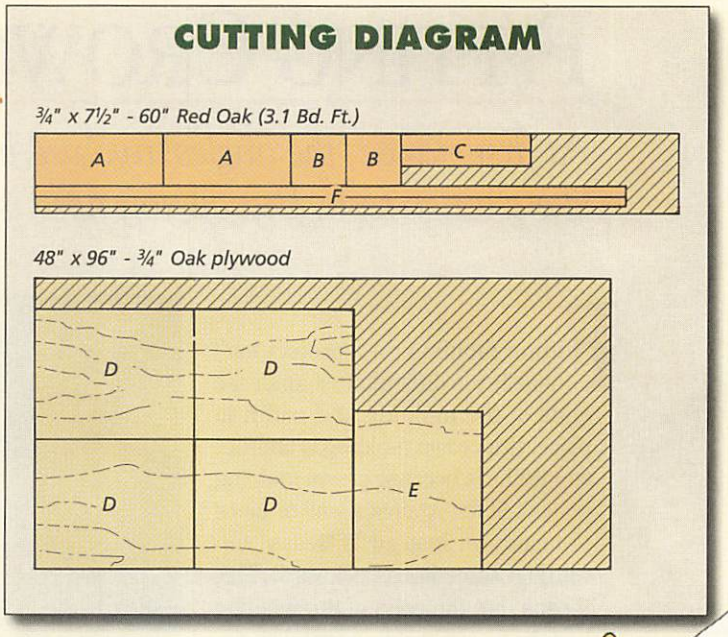

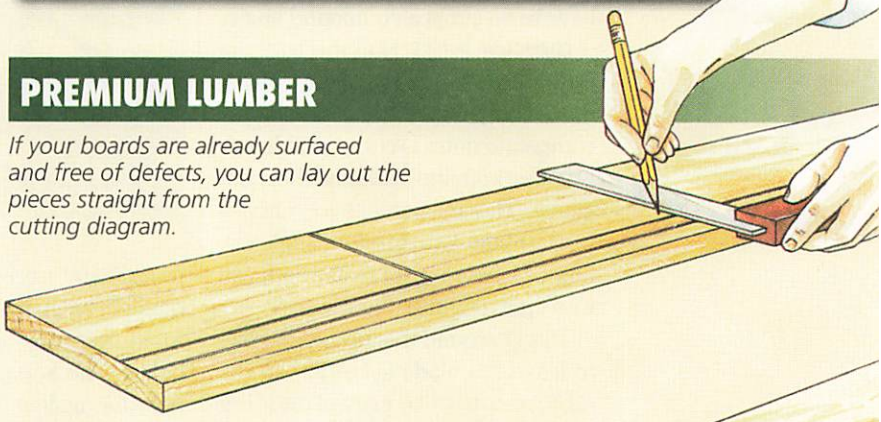

PREMIUM LUMBER

If your boards are already surfaced and free of defects, you can lay out the pieces straight from the cutting diagram.

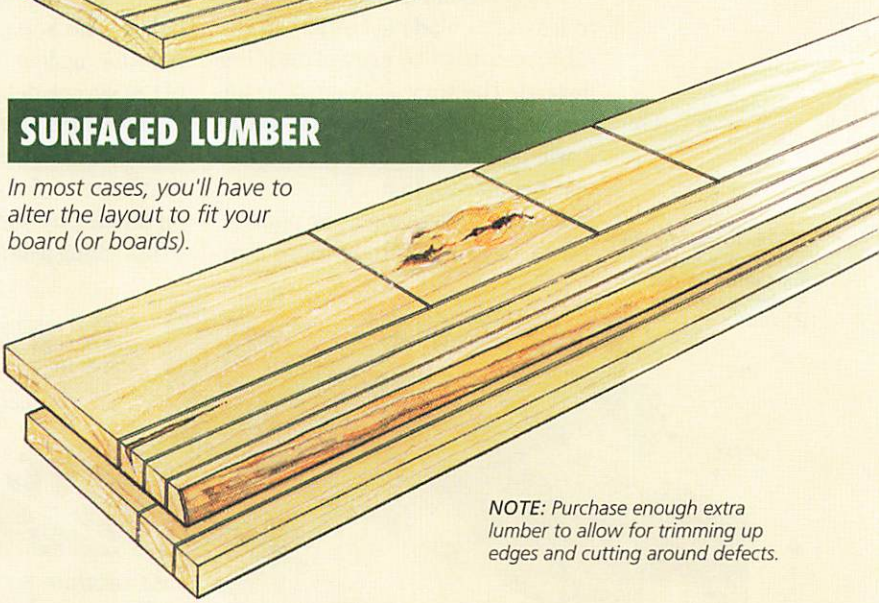

SURFACED LUMBER

In most cases, you'll have to alter the layout to fit your board (or boards).

NOTE: Purchase enough extra lumber to allow for trimming up edges and cutting around defects.

CUTTING PLYWOOD. There's one occasion when you can always use the cutting diagram just as it appears. That's when building a project that calls for plywood.

Since plywood comes in standard 4' x 8' sheets, you can follow the cutting diagram exactly. Just make sure you pay attention to the grain direction.

FITTING CROWN MOLDING

At first glance, the angles involved in fitting crown molding make it look like a tough task. But all you need is a simple jig and a little patience.

Fitting molding on a project isn't usually too difficult. Just miter the ends of the molding and nail it in place. But crown molding is another story. That's because crown molding doesn't fit flat against a wall or piece of furniture. Instead, it "leans" forward (or sometimes, backward). This means that the ends of the molding have to be cut at a compound angle.

COMPOUND MITERS. Half the battle in fitting crown molding is in cutting these compound miters. Normally, a compound miter is cut on a table saw by tilting both the blade and the miter gauge. This means that you have to worry about two different angle settings. If either one of them is off, you won't get a tight-fitting miter.

To get around this problem, I like to leave the blade set at 90° to the table and tilt the crown molding instead. The trick is to position the molding at the same angle at which it will be installed. And to do this, I use a simple jig that attaches to the face of my miter gauge, see photo.

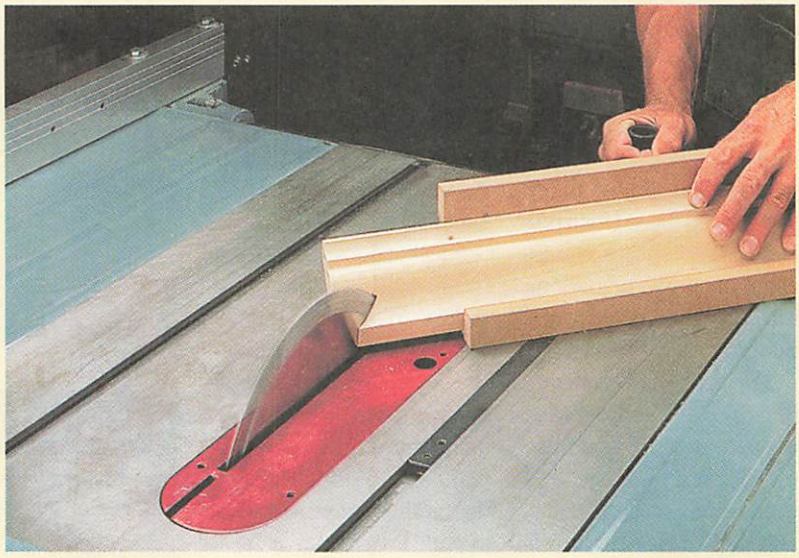

The jig does nothing more than provide a 90° corner to rest the crown molding against and a lip to keep the molding propped up, see drawing below. The key is that the molding rests flat against the face and bottom of the jig, see detail 'a'.

Shop Note: The dimensions shown in the drawing are for the jig we used to cut the 3½" crown molding used on the display shelf. If you are going to be cutting a different size of crown molding, you'll have to adjust the dimensions of the jig accordingly.

Using a jig to hold the molding in position also makes it easier to visualize the finished cut before you make it. This may not sound like a big deal, but figuring out which way to hold a piece of crown molding when mitering the ends can get confusing. Shop Note: You will have to readjust your miter gauge and move it to the opposite side of the blade depending upon which end of the molding you're cutting and the direction of the miter.

FITTING THE MOLDING. To me, the secret to fitting crown molding is to take it slowly, fitting each piece individually. But the order in which you cut and fit the individual pieces of molding depends a lot on whether you're applying the molding to a room or a furniture project. And sometimes it even depends on the nature of the project.

For the display shelf, I found it easiest to place the shelf upside-down on top of my workbench and work from one end to the other. In other cases (a kitchen cabinet, for instance), it

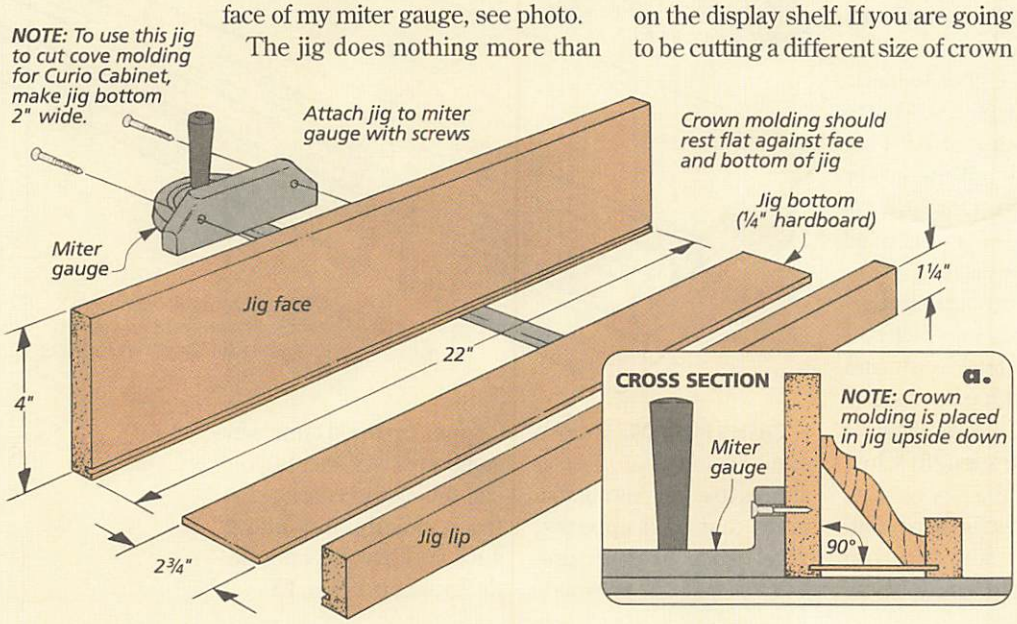

might be easier to apply the molding to both sides first and then fit the center piece in between.

Usually, I start fitting crown molding by cutting each piece to rough length, allowing plenty of extra length for mitering the ends. And when it comes to mitering the pieces to exact length, I rely on cutting the pieces to fit rather than using a rule or tape measure. This way I don't have to worry about measurement errors.

I start fitting the first piece of molding by simply mitering one end and holding it up against the project to mark it for length, see Step 1.

Then after trimming the piece to length, nail it in place using small brads or finish nails, see Step 2. (I use a pair of needle-nose pliers to hold the brads while hammering them in.) With this piece of molding attached firmly in place, it's much easier to test fit the next piece.

The second piece of molding is fitted in the same fashion — start by mitering one end (the end that will butt against the first piece of molding). Just remember to readjust your miter gauge and move it to the opposite slot, see Step 3.

Now test the fit of the two pieces. They should meet with a nice, tight joint line in between. If they don't, either your cuts are off or the corner is not exactly square, see the remedy in the box at the lower right.

When you're satisfied with the fit of the two pieces, mark the opposite end of the second piece for length, see Step 4. This end is also mitered, see Step 5. But be very careful when marking and cutting this piece, since if you cut it too short, there's nothing you can do but start all over again with a new piece of molding.

Once you have the second piece of molding cut to the right length and nailed in place, you're pretty much home free. All you have to do now is fit the last piece. This is just a matter of mitering one end, testing the fit, and then marking and cutting the opposite end to length, see Step 6.

After the last piece of molding is nailed in place, I like to go back and set all the nail heads and fill the holes with putty so they won't be seen. W

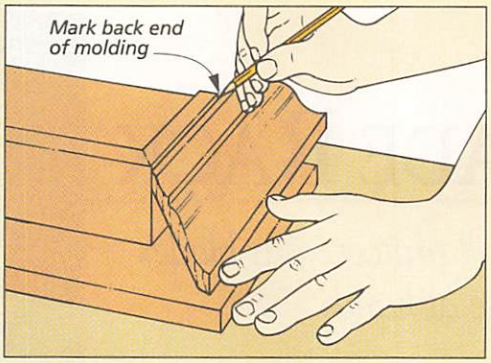

1 *After mitering one end of the first piece of crown molding, hold it in place against the project and mark it for length.*

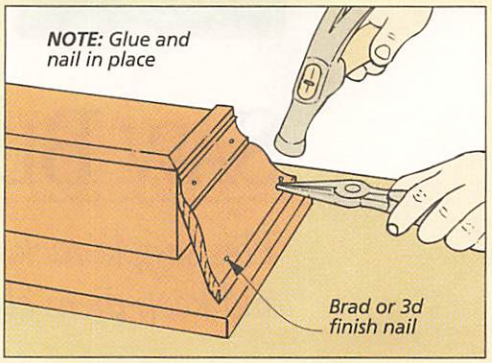

2 *Attach the first piece of molding with brads or 3d finish nails. A pair of needle-nose pliers holds the brads while you drive them in.*

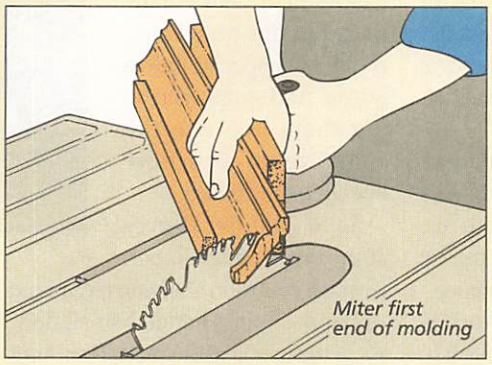

3 *To miter the second piece, move the miter gauge to the other side of the blade and readjust it to the opposite 45° setting.*

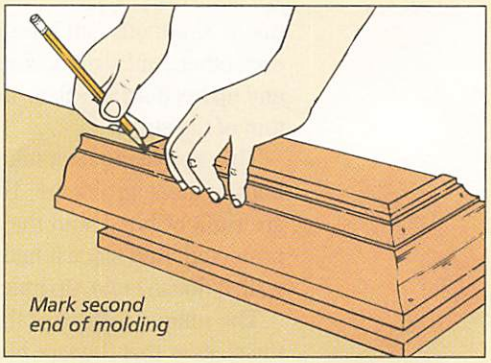

4 *After checking the fit of the two pieces of molding, carefully mark the second piece so it can be mitered to final length.*

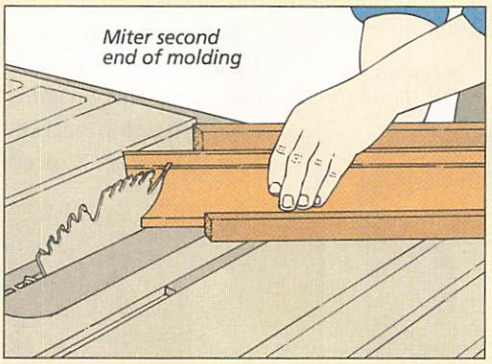

5 *Using the marks as a guide, miter the second piece of molding to length. Just be careful not to cut the piece too short.*

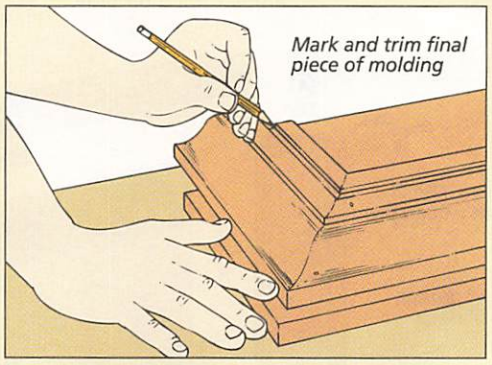

6 *The last piece of molding is fitted the same way as the first — miter one end, mark it for length, and trim it to size.*

ENSURING A TIGHT FIT

If you're trying to fit crown molding to a corner that's not exactly square, you'll probably find a noticeable gap where the two pieces of molding meet.

To get rid of this gap, try relieving the back edge of the miter by trimming off a small amount of material with a chisel, block plane, or sandpaper. This allows the pieces to fit together tightly along their front edge.

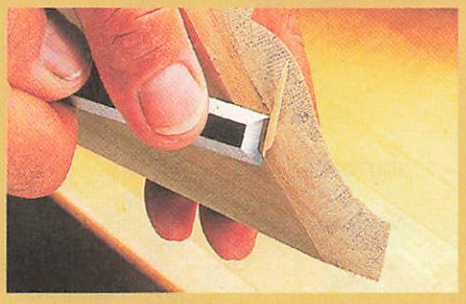

SAW BLADE RACK

This simple rack will protect your blades and keep them close at hand.

I've seen quite a few woodworking shops where the table saw blades are hung on a nail. The problem with this is the teeth can knock against each other. And somehow, you always end up needing the blade on the bottom of the stack.

This saw blade rack takes care of both of these problems. The blades are right at hand, and the teeth are protected. And since it hangs on the wall, it doesn't take up much space.

The unique feature of this rack is the sleeves that the saw blades slide into. They tilt forward so the blades are easy to pull out and slide back in. But getting the sleeves at the correct angle took a bit of head scratching.

My first thought was to cut a series of angled dadoes in the sides of the rack. But this would have required a special indexing jig. And simply screwing them between the sides would also have been a bit awkward.

So to hold the sleeves at the proper angle, I borrowed a common shelving technique — support pins. I added small dowels to the inside of the rack. Then I cut grooves on the ends of the sleeves. This way, they simply slide over the pins without any hassle, see drawing in right margin on page 23.

RACK. To build the rack, I started with the rack assembly. This includes the 3/4"-thick **top** and **bottom (A)** that are trapped between a couple of rabbeted **sides (B)**, see drawing and detail 'a' below.

After all the pieces were cut to size and the side pieces were rabbeted, I cut a groove in each piece for a 1/4"-thick hardboard back, see detail 'b'. Then I dry assembled the rack and cut the **back (C)** to size.

But before you glue the rack together, drill a series of holes for the 1/4"-dia. support **pins (D)**, see details 'c' and 'd'. Then cut 3/4"-long pins from

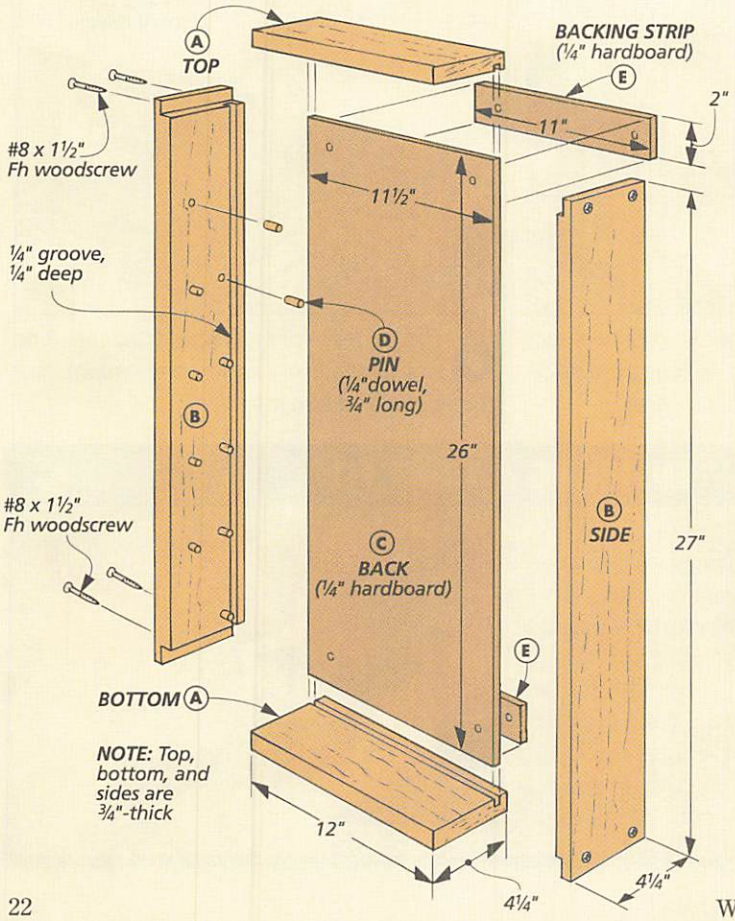

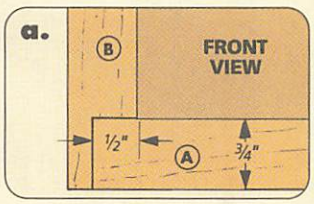

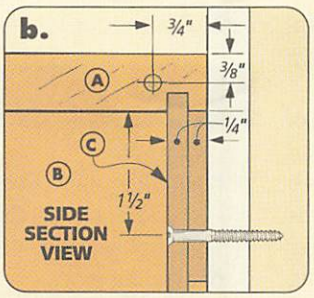

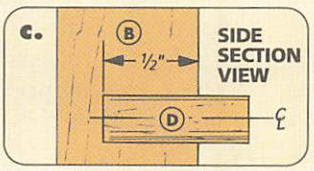

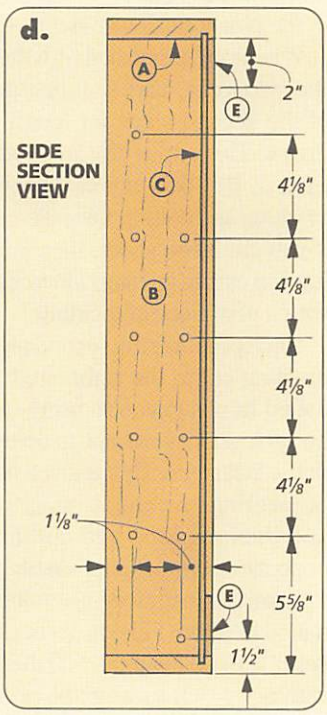

1/4" dowels and glue them in the holes.

With the rack glued and screwed together, I glued two 1/4" hardboard **backing strips (E)** to the back, see the drawing on the page at left. These strips simply support the back when it's time to screw the rack to the wall.

SLEEVES. Now you can turn your attention to the sleeves, see the drawing at right. Each sleeve is a sandwich of three layers of 1/4" hardboard.

I started by cutting two rectangular **sleeve faces (F)** for each sleeve. I made mine 1/16" shorter than the width of the rack opening (10 15/16"). Then to make it easy to slide the saw blades into the sleeves, I chamfered the inside edge only of each face, see detail 'a' at right.

Next, I worked on the **sleeve spacers (G)**, see drawing above. These end up as triangle-shaped pieces that allow the saw blade to slide between the sleeve faces. But they start as 4 1/8" square blanks made from 1/4" hardboard, see Fig. 1. (One square blank will make two triangular spacers.) And to cut the blank into spacers, I made a simple sled, see Figs. 1 and 1a.

The base of the sled is a 4" x 12" scrap piece of plywood. By gluing a couple fences in place, the sled will hold the spacer blanks at the right angle. (I used a blank to position the fences when gluing them to the sled.

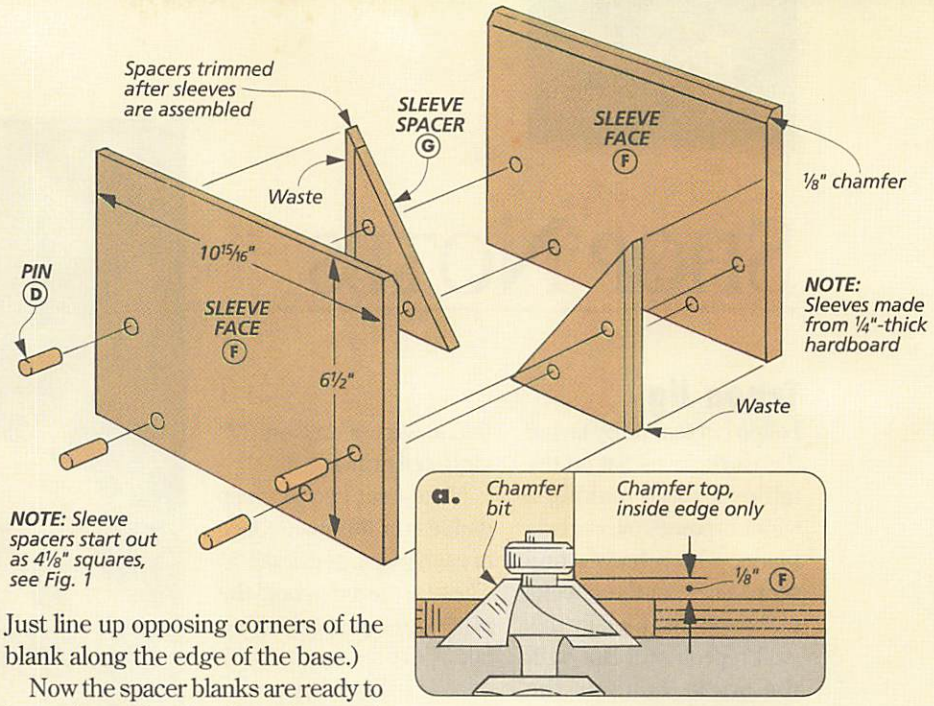

Just line up opposing corners of the blank along the edge of the base.)

Now the spacer blanks are ready to be cut into triangles. But when positioning the rip fence, set it so the blade cuts through the center of the square, see Fig. 1. (This means your first pass will trim off the edge of the sled.)

With the spacers cut to size, the sleeves can be assembled. But since glue makes the pieces slide, I decided to use more pins (D).

To do this, first I drilled 1/4"-dia. holes for the pins in all four pieces of each sleeve. To ensure that all the pieces line up, I used the sled again, clamping it to the drill press table, see Fig. 2. After drilling the first hole in each corner, flip it over and drill the second, see Fig. 2a. Note: With the face pieces, drill the holes at the bottom edge (the one *not* chamfered).

Now, after you've cut some more 3/4"-long dowel pins, the sleeves can be glued together. Just keep in mind that the chamfered edges on the face pieces should face each other.

At this point, all that's left is to cut a centered groove on each end of the sleeve, see Fig. 3. Size this groove to fit over the pins inside the rack assembly. Then screw the rack to the wall and slide the sleeves into place. W

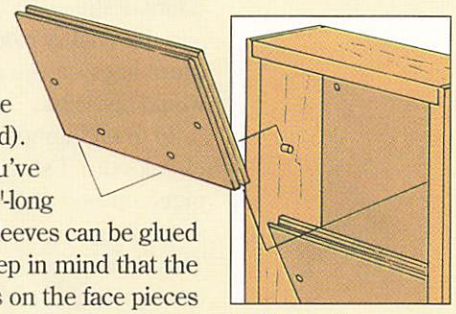

▲ *To position the sleeves at the proper angle, they have grooves that slide over dowel pins.*

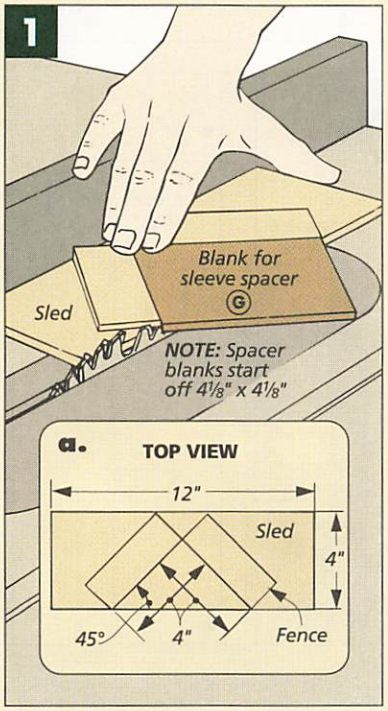

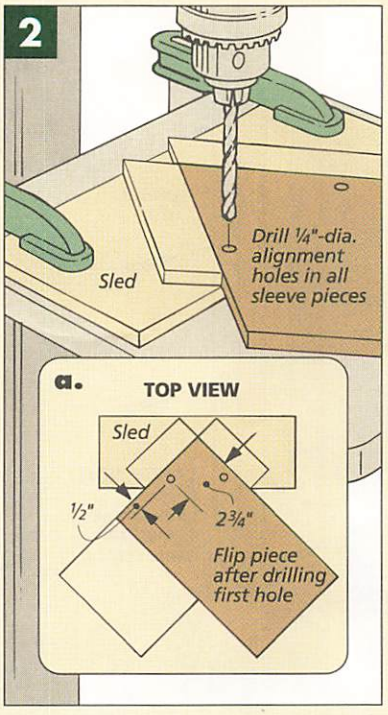

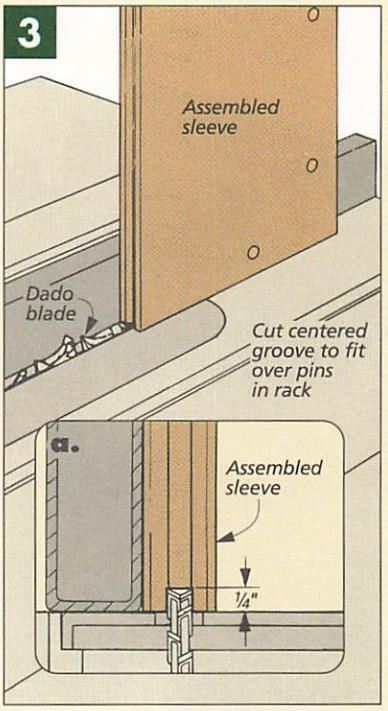

SHOP NOTES

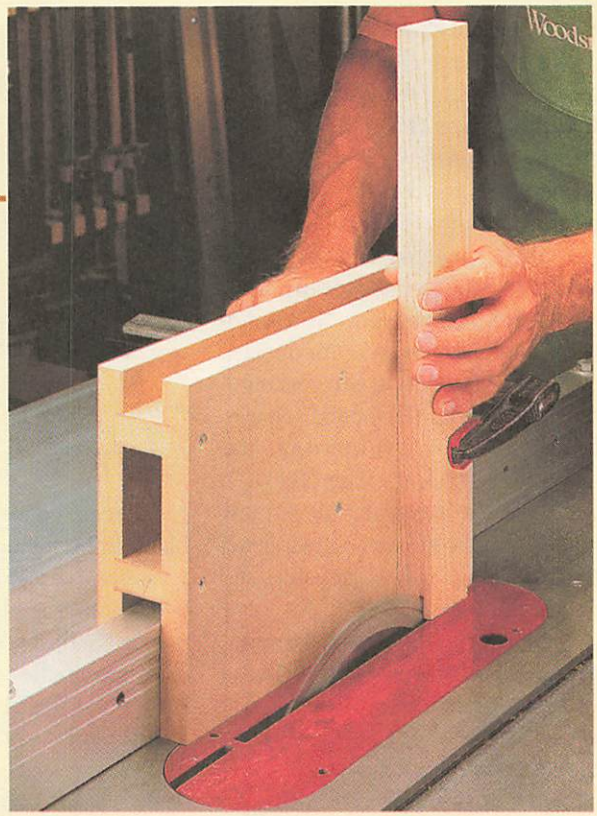

Tenon Jig

I often cut tenons by laying the workpieces flat on the table saw and making a series of passes over a dado blade, which leaves tiny score lines on the cheeks of the tenons. Usually this isn't a problem. But with the bridle joints on the doors of the curio cabinet and the Shaker clock, any score lines on the cheeks would be visible.

So to end up with clean cheek cuts, I stood each piece on end and used a simple tenon jig, see photo. This is basically just a tall carriage that straddles the rip fence. And to keep the workpiece 90° to the table, there's a vertical stop that the piece butts against, see the drawing below.

FACE PIECES. To make this jig, I started by cutting two face pieces out of ¾" MDF. (Mine were 8" tall and 12" long, see drawing.)

Next, I cut two ¼"-deep dadoes on the inside face of each piece, see detail 'a'. These are sized to hold the MDF crosspieces added later. Just be sure to position the bottom dado so the crosspiece will clear the top of the rip fence (and any exposed bolt heads on top of the fence, see detail 'a'.)

Before working on the crosspieces, I cut one more ¼"-deep dado for the vertical stop, see drawing. This allows you to easily replace the stop in the correct position — exactly 90° to the table. (The stops tend to get chewed up as they pass over the saw blade.)

CROSSPIECES. With the two face pieces complete, I connected them with a couple crosspieces, see drawing and detail 'a'. These are sized so the faces fit just snug against the rip fence. The goal here is to allow the tenon jig to slide easily — but without any "slop."

When the crosspieces are cut to final size, the jig can be screwed together. I also waxed the inside faces of the jig so it would slide easily on the fence.

VERTICAL STOP. Finally, I cut the vertical stop to fit the dado and screwed it in place as well. But to avoid damaging the blade, place the bottom screw above the highest blade setting.

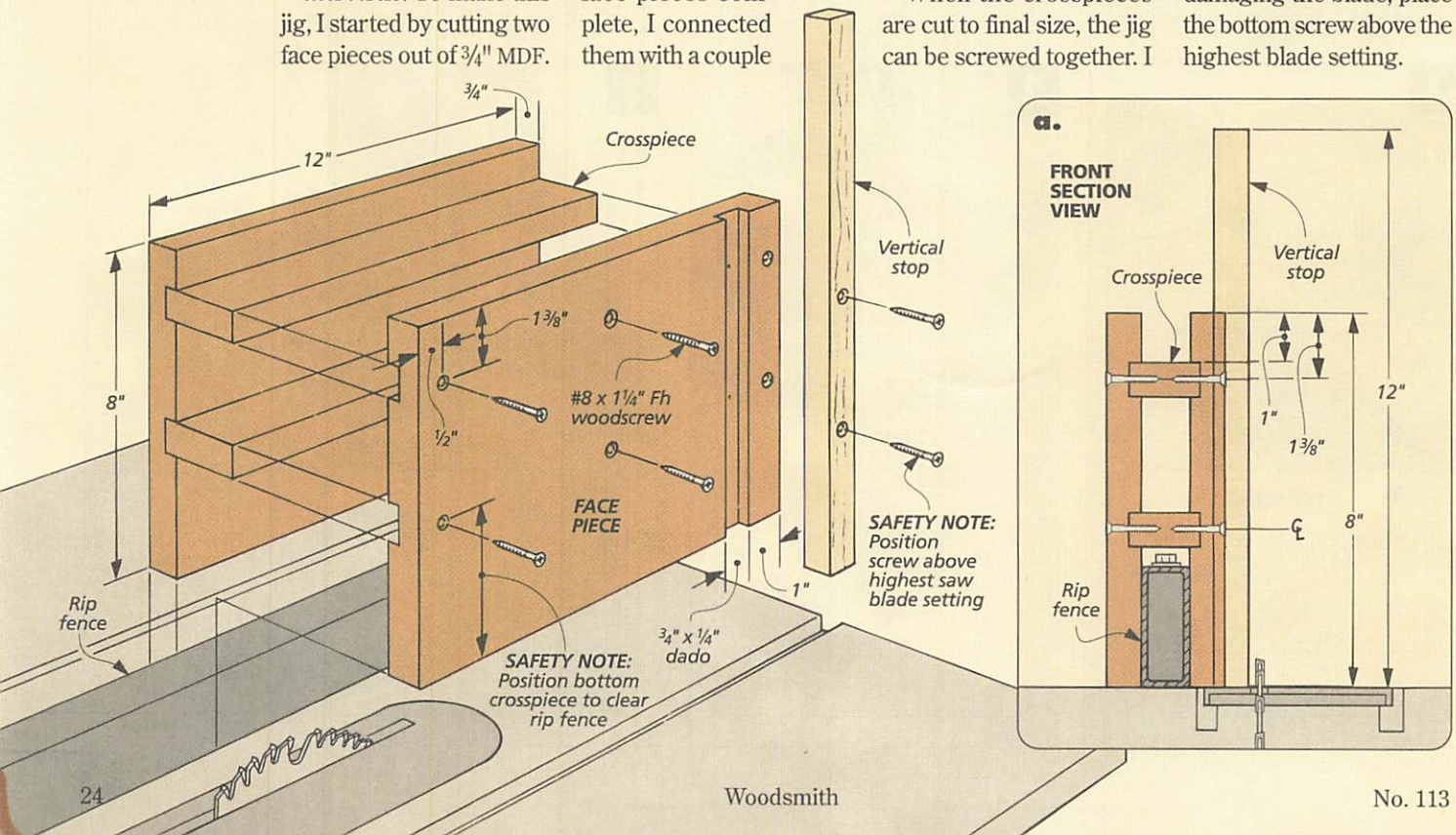

Routing Hinge Mortises in Rabbets

When creating hinge mortises, I use my router and straight bit to get a clean, consistent mortise. But with the curio cabinet on page 6, I had to use a little different procedure.

First, I had to rout the hinge mortises *before* gluing the case together. Otherwise, there wouldn't have been enough room for the base of the router.

Another difference was the side pieces had rabbets on their front edges. This created a couple problems. First, there wasn't enough support for the base of the router. And second, since the doors aren't rabbeted, the height of the bit would have to be changed.

The solution to both of these problems was to use spacer strips. When routing the mortises in the case sides, I carpet-taped some thin scrap pieces into the rabbets, see Fig. 1. By sizing these spacers so they were flush with the sides, they provided extra support for the base of the router.

Later when it was time to rout the hinge mortises in the door, I used the spacers again, see Fig. 2. This time, they "lift" the router base so you don't have to worry about changing the depth of the bit.

Note: I did clamp a support piece next to the door to give the router base more support, see Fig. 2.

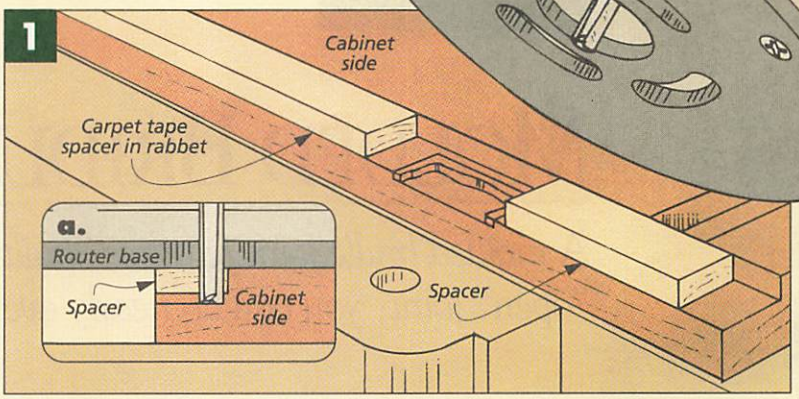

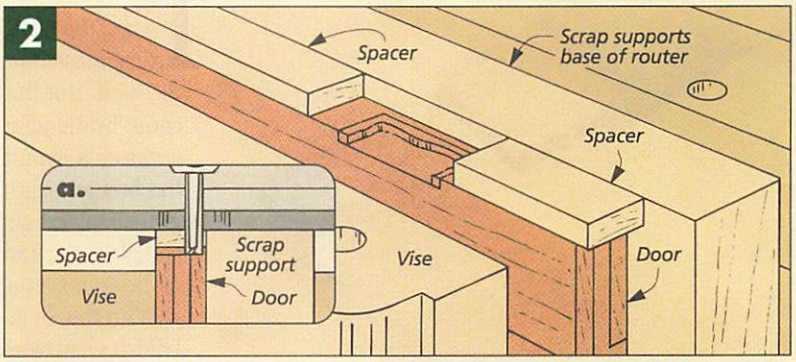

Ball Catch Tip

Typically, when installing ball catches, I mount the "strike" part of the catch to the inside of the door first, see Fig. 1. (Make sure the strike is just below the top of the cabinet.)

Next, I put the ball catch on the strike and closed the door, see Fig. 2. This way, I can reach inside the cabinet and mark the pilot holes for the ball catch in exactly the right position.

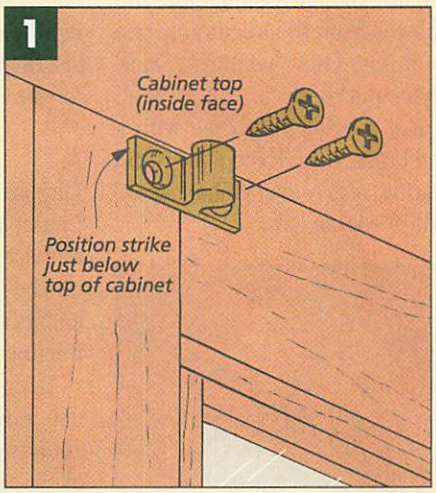

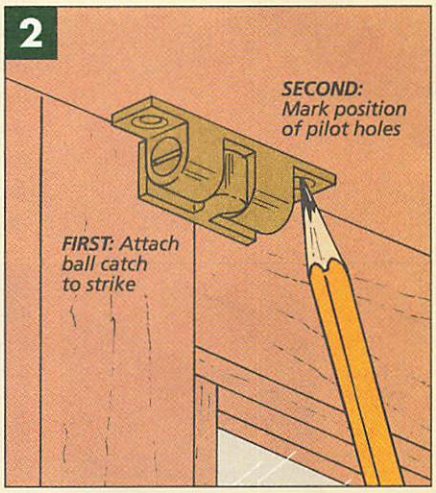

Hanging Cleat Modification

When hanging a shelf or cabinet, I like to use a simple cleat system. It features two thin strips with mating bevels cut at 45°. One piece is screwed to the wall. The other is attached to the shelf or cabinet. To hang the shelf, you simply set the shelf cleat on the wall cleat.

When it came time to hang the display shelf on page 16, I planned to use this cleat system. But the shape of the shelf created a problem. The shelf sticks *out* from the wall farther than it hangs *down* from the cleat. So small bumps and vibrations caused the shelf to creep up the wall cleat, see Fig. 1. Before long, the shelf would have come crashing down.

To prevent this from happening, I removed the wall cleat and glued a hardboard lip to the front. This lip sticks up above the cleat so the shelf cleat (and the shelf) is trapped against the wall, see Fig. 2.

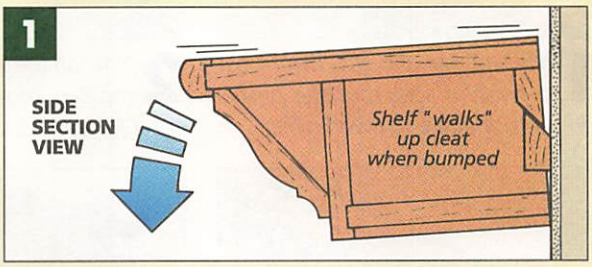

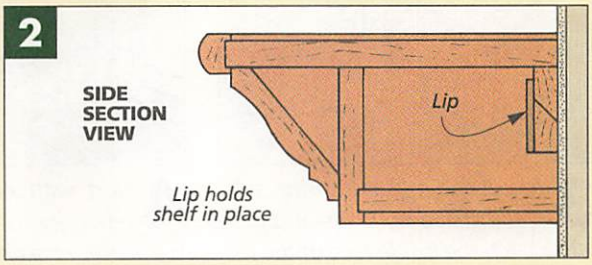

MOLDED BRIDLE JOINT

A molded bridle joint features "built-in" molding. And because it's an "open" joint, you can do nearly everything with the table saw.

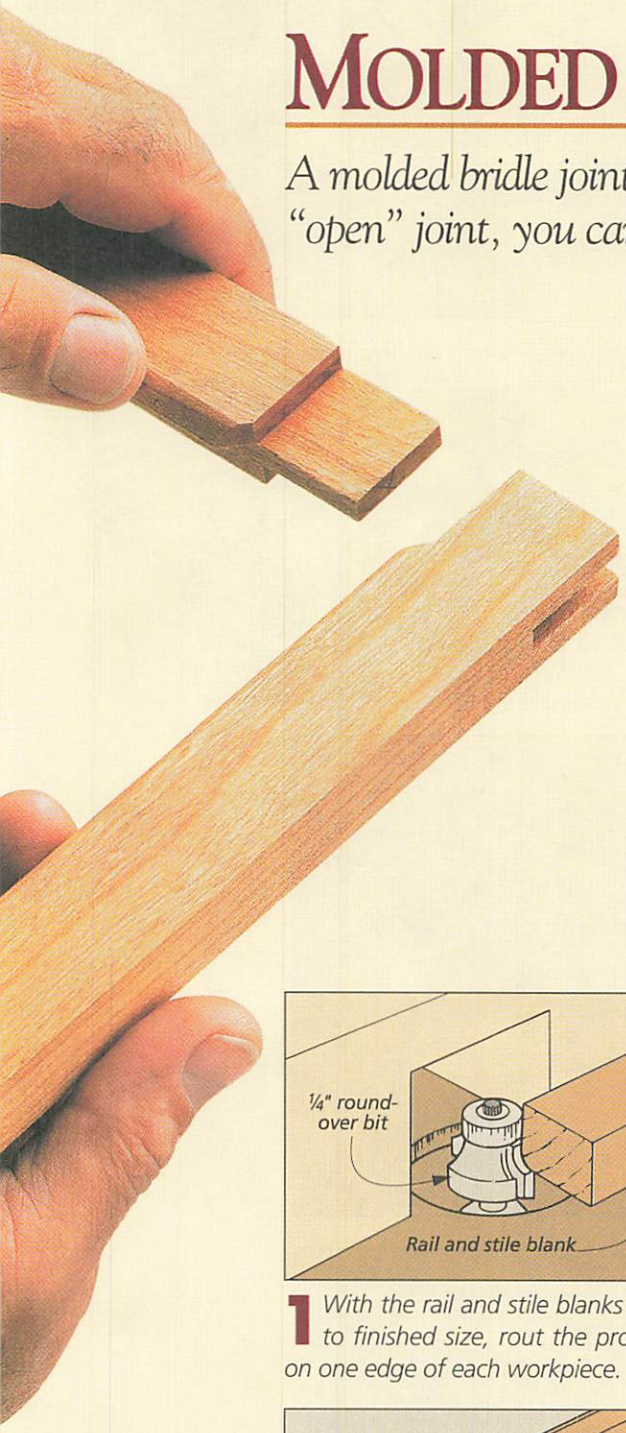

Two of the projects in this issue feature glass doors joined with a bridle joint. But they're not exactly the same bridle joint. The curio cabinet features a standard bridle joint, see the box on page 27. And to hold the glass in place, strips of bead molding and glass stops are added to the inside of the door frame after it's assembled.

With the Shaker clock on page 28, I didn't want to add the molding later. Instead, the molding is built into the door pieces from the beginning, see photo at left. This "seamless" look usually requires quite a bit of hand work. But this isn't the case with a molded bridle joint. Except for some final paring, nearly everything can be done on the table saw.

MAKING THE BLANKS. A bridle joint is made by cutting an "open" mortise and a tenon. And one nice thing about it is you don't have to worry about adding or subtracting for the tenons when it comes time to cut the pieces to length. The stiles will equal the full height of the door. And the rails will equal the full width of the door.

Once the workpieces are cut to final size, I rout the profile along the inside edge of the piece, see Step 1. Then I cut the rabbet on the adjacent edge, see Step 2. Now the pieces are ready for the molded bridle joints.

OPEN MORTISE

Like a regular mortise and tenon joint, I make a bridle joint by creating the mortise on the stile first. It's centered on the thickness of the workpiece, and its width is roughly a third of the thickness of the workpiece.

To cut this mortise, I don't have to use a drill press or spend any time squaring up the mortise with a chisel. Since the mortise is "open" on the end, it can be cut with a simple tenon jig. (If you don't have a tenon jig, it doesn't take much to make one, see the instructions on page 24.)

To set the height of the blade, I use

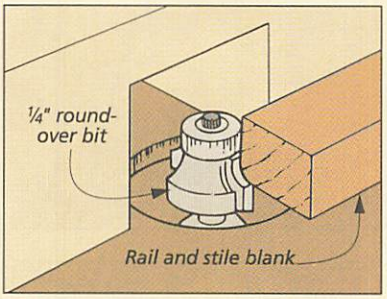

1 *With the rail and stile blanks cut to finished size, rout the profile on one edge of each workpiece.*

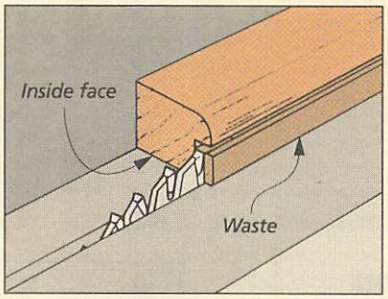

2 *Now on the edge adjacent to the molded edge (the inside face), cut a ¼" x ½" rabbet on each piece.*

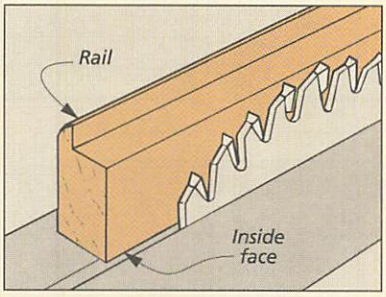

3 *To cut the mortise on the stile, first install a rip blade and raise it to match the inside face of the rail.*

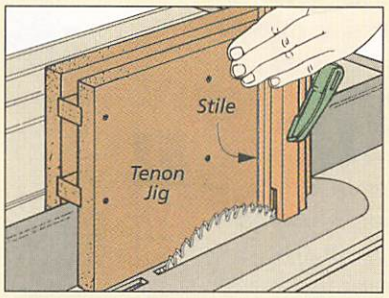

4 *Next, with the stile clamped to a tenon jig, cut a centered mortise, flipping the piece between passes.*

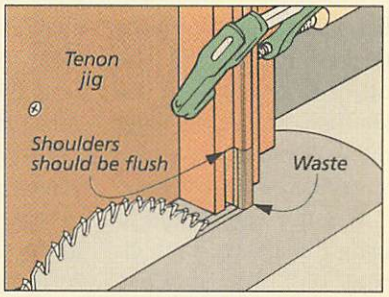

5 *Now rotate the stile and remove the shoulder left by the rabbet, sneaking up on the final cut.*

the rail piece, see Step 3. Here, the blade is raised until it's flush with the bottom of the rabbet. (This equals the width of the workpieces without the molding.) Then to center the mortise, I cut it in two passes, flipping the stile between passes, see Step 4.

At this point, the tenon jig allowed me to avoid a little hand work. That's because the molding at the end of the stile has to be cut away to make room for the rail, see photo on page 26.

Typically, this is done with a chisel. But since the saw blade was already set to the right height, I simply rotated the stile and cut away the molding, sneaking up on the final position of the fence, see Step 5. (The shoulders on either side of the mortise should be flush.)

TENON

Next, I worked on the tenons on the ends of the rails. Since the outside of each tenon will be visible when the joint is assembled, I cut them in two steps so there wouldn't be any score lines running across the cheeks.

The first step is to cut the shoulders with the rail lying flat on the table. I set the height of the blade using the stile piece, keeping the blade a little short of the mortise, see Step 6. (Otherwise, you'll end up with a score mark right at the shoulder of the tenon.) And the rip fence should be set so the shoulder equals the inside face of the stile piece, see Step 7. (Remember to set the fence from the *far* edge of the blade.)

The second step is to cut the cheeks of the tenons, see Step 8. Here again, I used the tenon jig. But this time, the blade should be just high enough to remove the waste. And you'll want to sneak up on the final thickness of the tenons until they fit snug in the mortises.

Since the saw blade was set short earlier, you'll need to clean up the shoulders of the tenon, see Step 9. Plus, there may be a thin, little "fin" created by the molding, which also should be removed with a chisel.

FITTING THE JOINT. At this point, the bridle joint is complete, but the pieces still won't fit together. That's because the molding still needs to be mitered. This requires a simple paring jig that will slide over the pieces, see Step 10.

Pare the molding with a chisel and the jig, see Step 11. The goal is for the rails and stiles to fit together tight. But even though the molding will end up flush with the shoulders of the mortises and tenons, it's still a good idea to sneak up on the cut so you don't end up with a gap. W

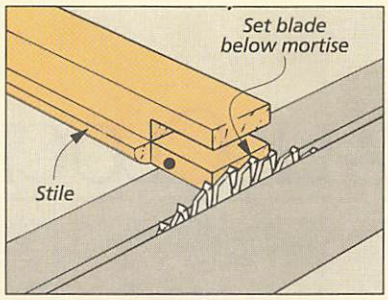

6 *To cut the tenons on the rails, first set the saw blade just below the mortise on one of the stiles.*

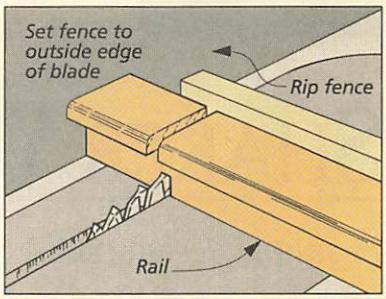

7 *Now set the fence so the shoulder cut will equal the inside face of the stile. Then cut the shoulders.*

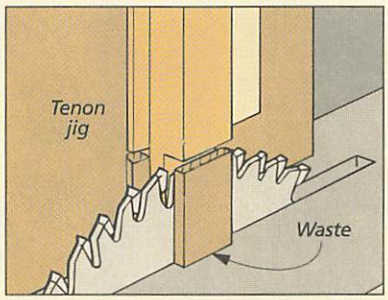

8 *Using the tenon jig, cut the cheeks, flipping the piece between passes. Sneak up on the tenon's final thickness.*

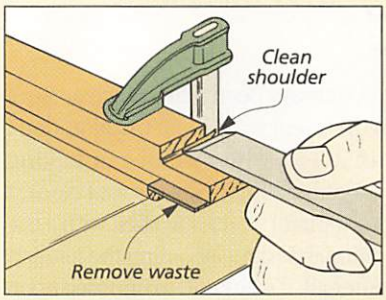

9 *Clean up the shoulders of the tenon, and if necessary, trim off the small "fin" left by the rabbet.*

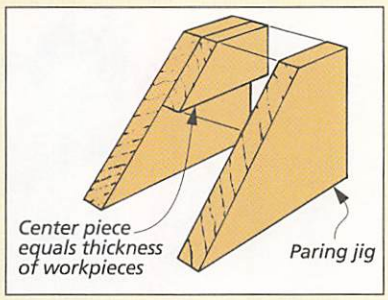

10 *To miter the molding, make a paring jig from three scrap pieces and miter the ends at 45°.*

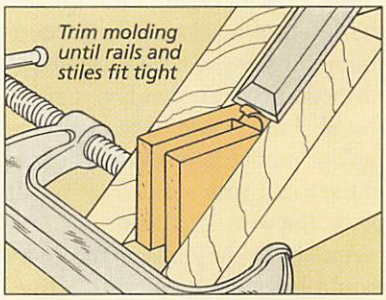

11 *Now, line up the rails and stiles in the jig and pare off the corners until the pieces fit tight together.*

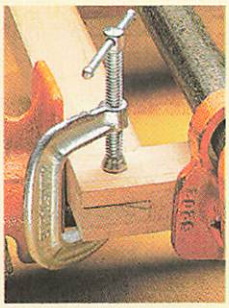

▲ *When assembling a bridle joint frame, position the clamps inside the joints and add C-clamps to the corners.*

STANDARD BRIDLE JOINT

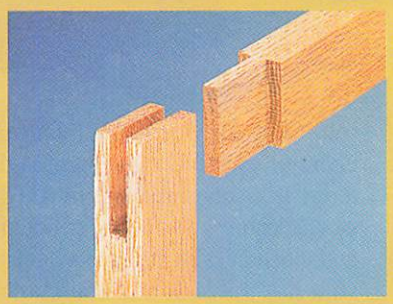

A standard bridle joint is even easier to make than a molded one. Simply follow Steps 3-4 and Steps 6-9. The big difference is that the depth of the mortise on the stile and the length of the tenon on the rail will be sized to match the full width of the workpieces.

SHAKER WALL CLOCK

A simple design calls attention to the joinery and workmanship that go into this clock.

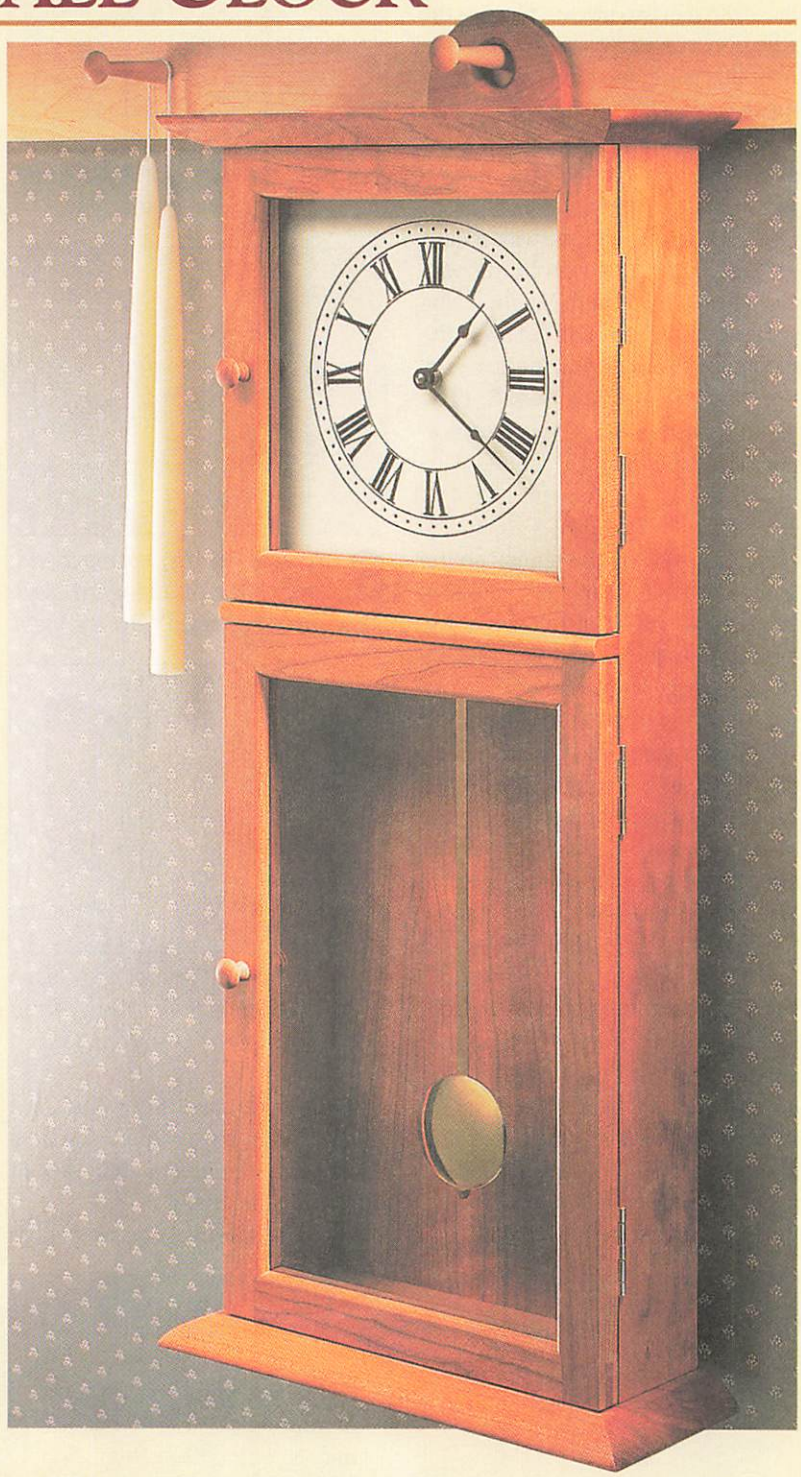

I've always been a strong advocate of the theory, "If it ain't broke, don't fix it." So when we began talking about building a Shaker wall clock, I knew that I wanted to stick with a traditional design, including the joinery. After all, it's difficult to improve upon the clean lines and proportions that the Shaker craftsmen came up with so many years ago.

MODERN METHODS. But even though the design of our clock is fairly true to the original, we used some "modern" methods of construction. For example, the Shakers would have made the molded profile at the top and bottom of the clock with a molding (hand) plane. But we used a table saw.

And the bridle joints on the doors would have been cut with a fine-toothed backsaw and a chisel. Here again, we used a table saw along with a shop-made tenon jig.

But I don't think using modern tools compromises the integrity of a project. In fact, being innovators themselves, the Shakers were quick to adopt new tools and methods. If they were still building furniture today, I'd be willing to bet they'd jump at the chance to try out a table saw or just about any other "new-fangled" tool.

OLD & NEW. Construction and design issues aside, the rest of the clock is also a mixture of the old and the new. Take the material for example. Most of the clock is built of solid cherry stock. But the back is made of 1/4"-thick cherry plywood. This prevents it from cupping and twisting out of shape the way solid wood might.

The clock movement is another example. Originally, a clock like this would have been fitted with a wood or brass mechanical clock movement. But we decided to use a battery-powered quartz movement instead.

In addition to being relatively inexpensive, a quartz movement is accurate, reliable, and never needs winding (just an occasional battery change). But this movement is different from ones we have used in the past. It features a swinging pendulum and mechanical striking mechanism, so it has the look and sound of an older clock (see page 35 for sources).

Construction Details

OVERALL DIMENSIONS: 13¼"W x 32"H x 5¼"D

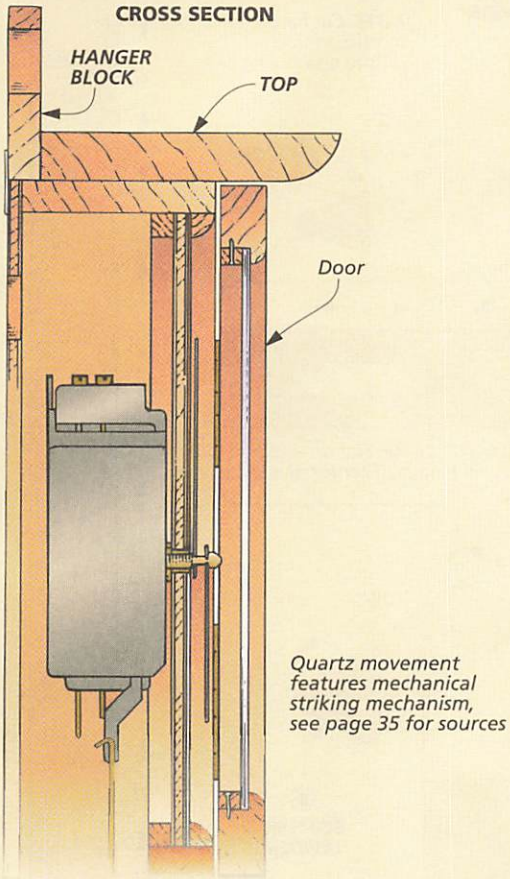

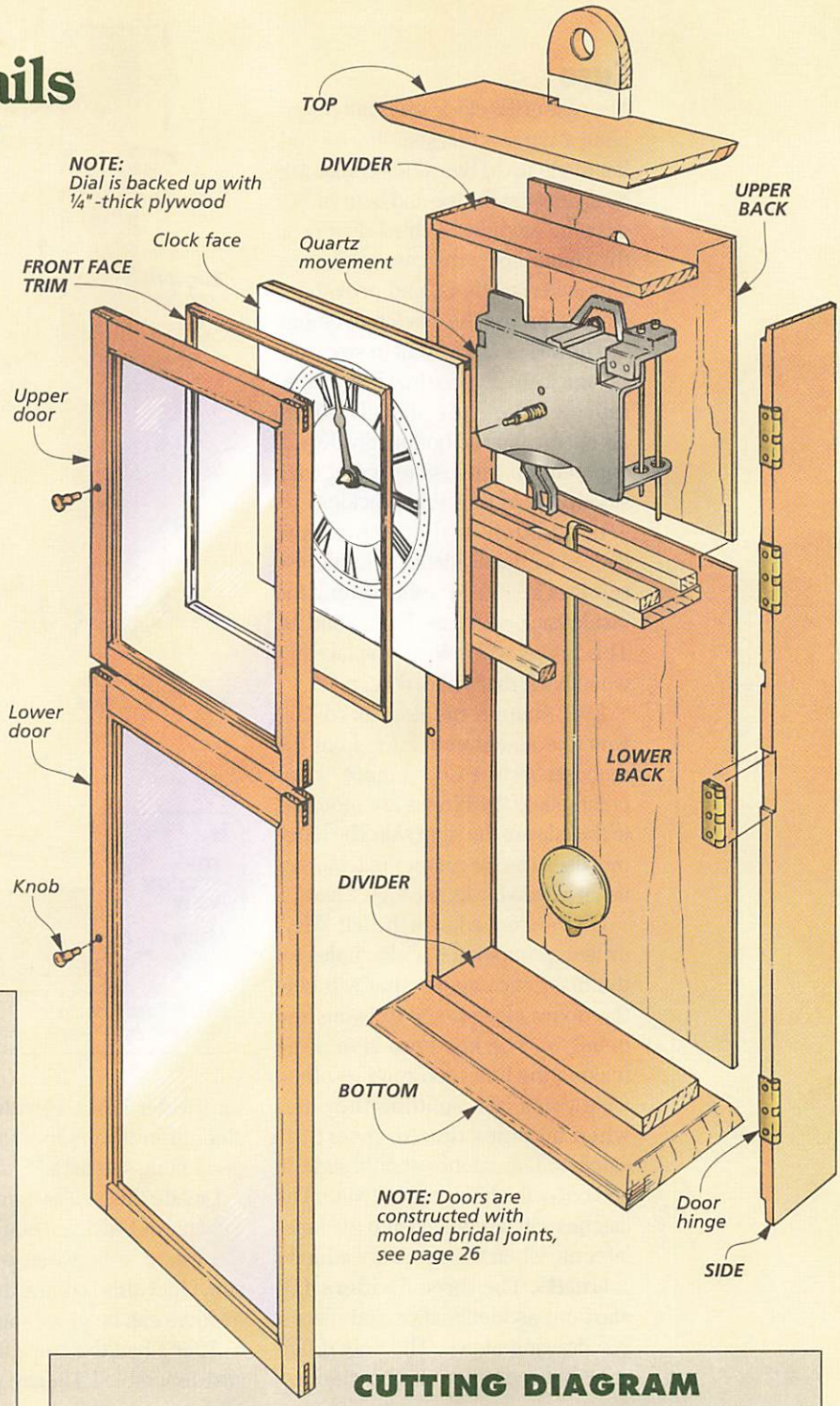

MATERIALS

A	Sides (2)	½ x 3¼ - 28½
B	Dividers (3)	½ x 3 - 10½
C	Spacers (2)	½ x 1 - 10
D	Divider Rail (1)	½ x 1 - 11
E	Top/Bottom (2)	¾ x 5¼ - 13¼
F	Hanger Block (1)	½ x 2¾ - 4
G	Front Face Trim (1)	⅜ x ⅜ - 42 (rgh.)
H	Backer Board (1)	¼ ply - 10 x 10
I	Back Face Trim (1)	⅜ x ⅜ - 42 (rgh.)
J	Stop Block (1)	¾ x ¾ - 4
K	Lower Back (1)	¼ ply. - 10½ x 17
L	Upper Back (1)	¼ ply. - 10½ x 11
M	Door Rails (4)	¾ x 1¼ - 11
N	Upper Stiles (2)	¾ x 1¼ - 10 15/16
O	Lower Stiles (2)	¾ x 1¼ - 16 15/16
P	Glass Stop (1)	¼ x ⅜ - 80 (rgh.)

SUPPLIES

- (2) #8 x 1" Flathead Screws
- (34) #18 x ½" Brads
- (4) Brass Turn buttons w/Screws
- (2) 5/16"-dia. Magnetic Catches w/Screws
- (2 pr.) 2" x 1" Brass Butt Hinges w/Screws
- (2) ¾"-dia. Cherry Knobs
- (1) Clock Movement w/Dial & Hands
- (2) ⅛"-thick Glass Panels for Doors

CUTTING DIAGRAM

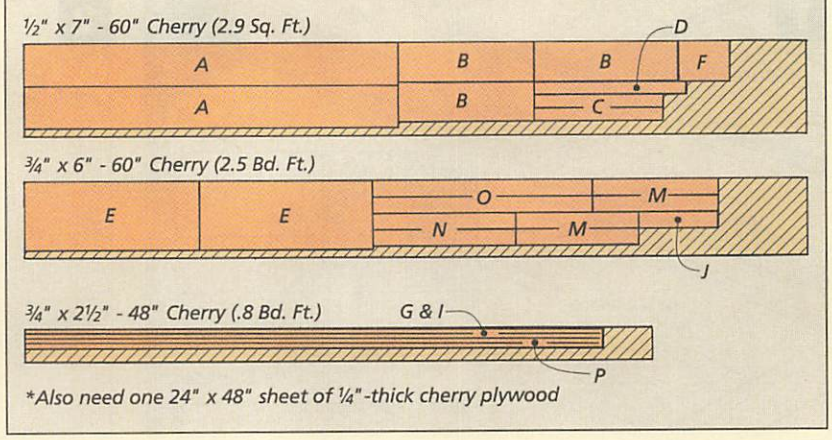

*Also need one 24" x 48" sheet of ¼"-thick cherry plywood

Case

The case of the clock starts out resembling a narrow box standing on end. It's made up of two sides connected by dividers at the top and bottom, see drawing at right. A third divider in the center splits the case into upper and lower sections, and provides a place to mount the clock movement.

The **sides (A)** are cut to size from ½"-thick stock, see drawing. Then I rabbeted the ends of each side to accept the top and bottom dividers. A dado cut on the inside face of each side will hold the center divider.

In addition to the rabbets and dadoes for the dividers, each side also receives a ¼" x ¼" rabbet along the inside back edge, see Figs. 1 and 1a. This rabbet will hold a two-piece plywood back that's added later.

Even though the door hardware won't be added until later, I cut the mortises for the door hinges at this point. Since the hinges are mounted to the edge of the right side, the hinge mortises can be cut on the table saw using a dado blade, see Figs. 2 and 2a.

On the front edge of the left side, I drilled a couple of 5/16"-dia. holes for the magnetic catches that will hold the doors closed, see drawing and detail 'b'. The key here is to avoid making the holes too snug — otherwise you'll risk splitting the sides when it comes time to insert the catches. The catches should slide in and out of the holes easily. (Note: The catches will be epoxied into the holes later on, when the doors are added.)

DIVIDERS. The three **dividers (B)** start out as identically-sized pieces, see drawing above. The only difference between them is that the center divider has a 1"-wide clearance slot cut in the middle for the clock pendulum, see detail 'a' above.

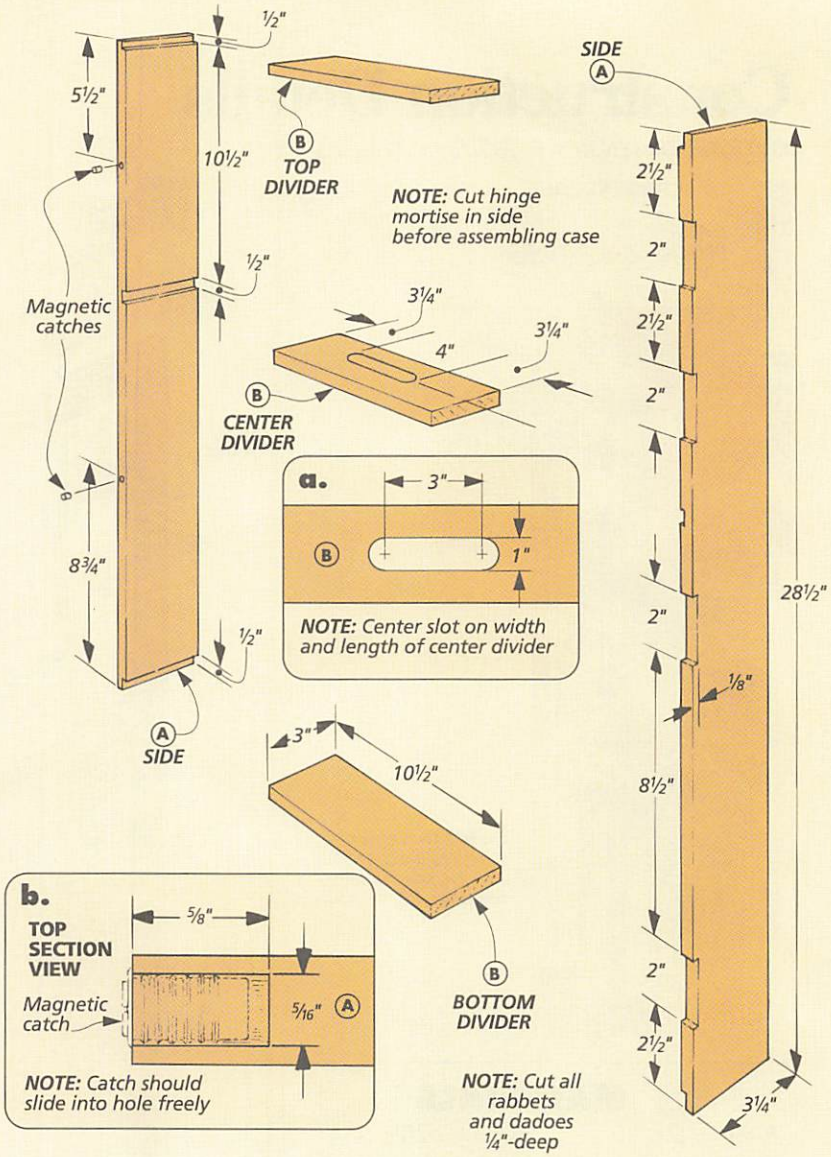

I made this slot by simply drilling a couple of 1"-dia. holes and removing the waste in between with a sabre saw. Once this is done, the sides and dividers can be glued together.

After I had the basic frame of the case assembled, I began work on the spacers and divider rail that are attached to the center divider, see drawing on next page.

SPACERS. I started by making a pair of **spacers (C)** to fit on top of the center divider — one at the front of the case and one at the back, see detail 'c' on next page. These are simply cut to size and glued in place.

With the spacers glued in place, I

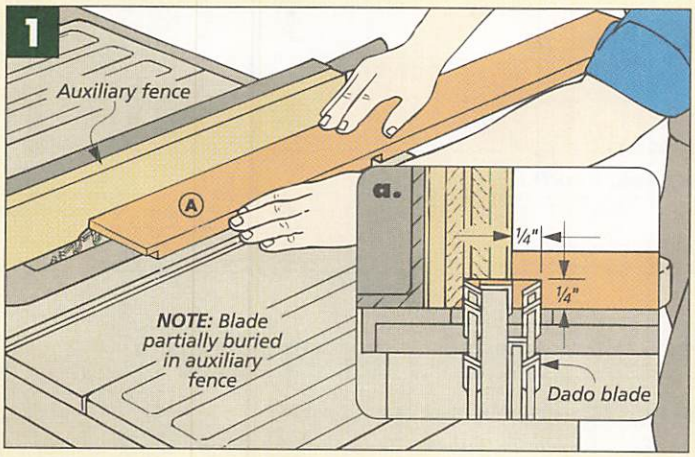

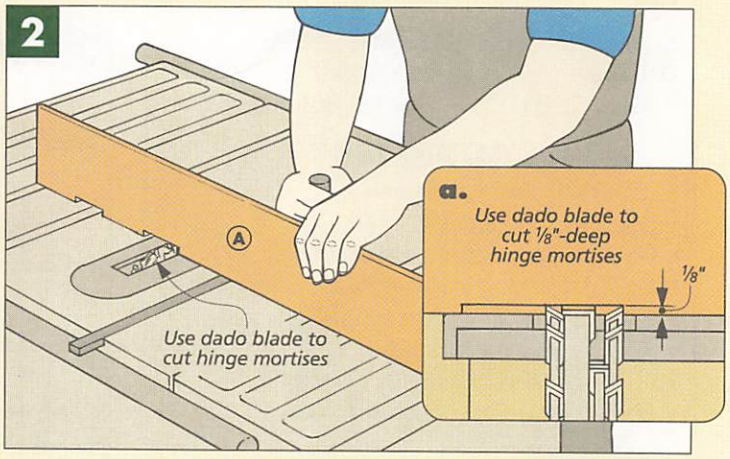

added a divider rail to the front of the center divider. This trim piece divides the upper and lower doors.

This **divider rail (D)** starts off as a wide, ½"-thick blank. To create the bullnose profile on the front edge of the rail I used a round-over bit, see detail 'd'. Then after ripping the rail to width (1") and cutting it to length (11"), it can be glued to the front edge of the center divider, see drawing at right and detail 'c'.

TOP & BOTTOM. There's not much to the **top** and **bottom (E)** of the clock. They start off as two identical pieces of ¾"-thick stock. But when it came to making the rounded profile on the ends and front edge of the top and bottom, I ran into a head-scratcher.

I wanted to create a gentle, ⅞"-wide roundover on the edges of these pieces. But since this profie is wider than it is high, it's not a true roundover. This meant I couldn't use a round-over bit to rout the profile. (Not to mention that a round-over bit this size is rather expensive.)

So instead, I used a table saw and a little hand work to create this irregular roundover, see box below.

NOTCH. Once I had finished shaping the profile of the top and bottom, I cut a notch centered on the back edge of the top piece. This is for the hanger block that will be added next. Once this is done, the top and bottom can be glued to the case.

HANGER BLOCK. Originally, clocks like this one were designed to hang from a peg on the wall. So I included a hanger block for an authentic touch.

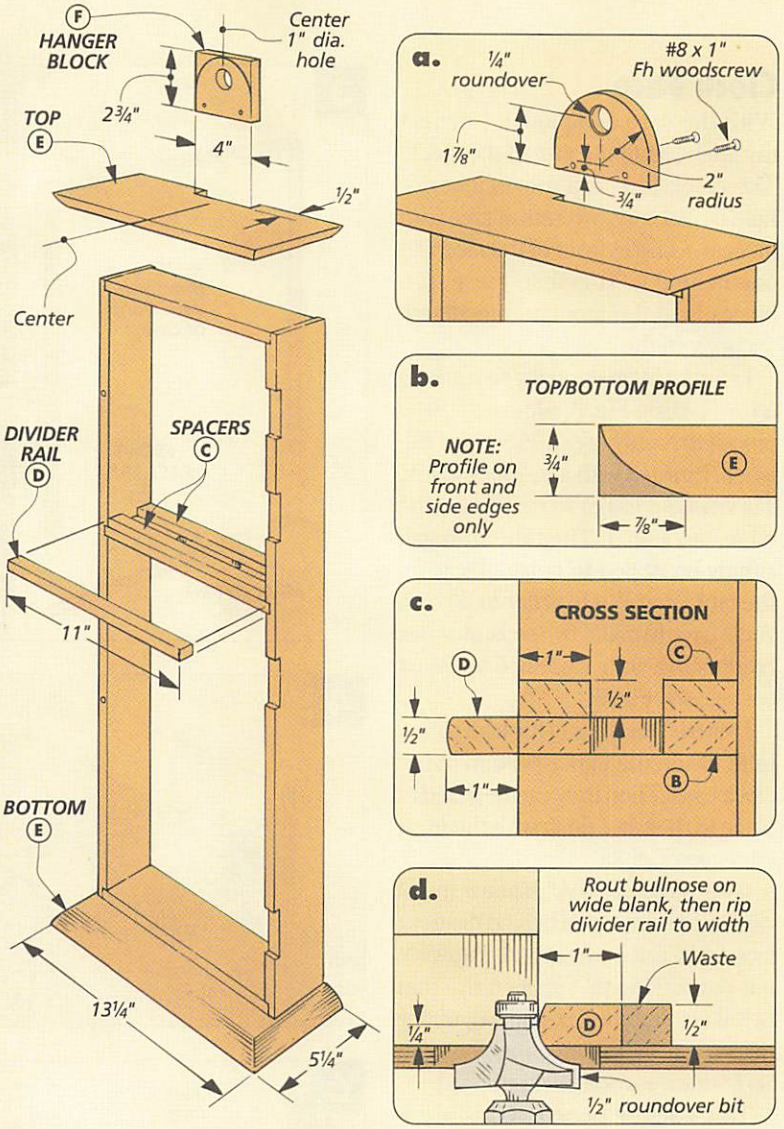

To make the **hanger block (F)**, I started with a rectangular piece of ½"-thick stock, see drawing. Before cutting out the arc at the top of the block, I laid out and drilled a 1"-dia. hole. Then I rounded over the outer edge of the hole with a router and a ¼" roundover bit.

After laying out and cutting the arc on a bandsaw, I sanded the edge of the hanger block smooth. Then to attach it to the case of the clock, I glued and screwed it in place, see detail 'a'.

SHAPING AN IRREGULAR ROUNDOVER

Shaping an irregular roundover is really a two-step process. With the profile traced out on the end of the stock, I use a table saw to remove most of the waste, see Steps 1 and 2. By tilting the blade, I can stay outside of my layout line.

Then I remove the remaining waste and refine the profile with a sanding block or hand plane, see Step 3.

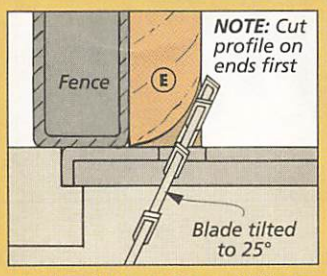

1 *Starting on the ends first to avoid tearout, tilt the saw blade to approximately 25° to make the first waste cut.*

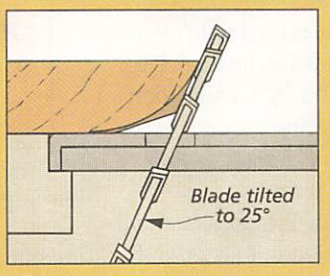

2 *For the second waste cut, simply flip the workpiece around and place it so it lies flat on the table saw.*

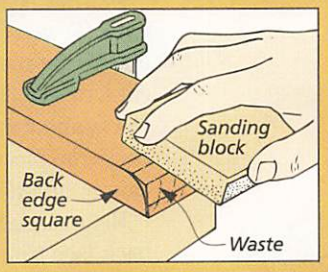

3 *Carefully sand or plane away the remaining waste to smooth out the roundover and complete the profile.*

Clock Face

With the case completed, I turned my attention to the face of the clock. The clock face and movement are held in place by two sets of face trim pieces — one in front of the face and one behind it. Together, these trim pieces hold the face and movement securely in the case.

I started by making the **front face trim (G)**, see Fig. 3. Although these pieces are only 3/8" x 3/8" when finished, I started with a 3/4"-thick blank. This made it easier to roundover the edge, see Fig. 4. Then the trim can simply be ripped to finished size on the table saw. But in order to do this, you'll have to make two separate cuts, readjusting your rip fence between passes, see Fig. 5.

I mitered the ends of the trim pieces to fit inside the upper portion of the clock case. Then they can be glued in place to the case, flush with the front edge, see Fig. 3a.

CLOCK FACE. The 9 7/8" square metal clock face is mounted behind the front face trim. But I was afraid that without any additional support, the thin metal face might flex and sag under the weight of the clock movement. So I added a wood backer board.

This **backer board (H)** is just a piece of 1/4"-thick plywood cut to match the case opening (10" x 10"), see Fig. 6. A 3/8"-diameter hole drilled in the center of the board allows the shaft for the hands to pass through.

The metal dial is not actually attached to the backer board. Instead, the two pieces are pinched between the clock movement and the movement retaining nut, as well as the two sets of face trim, see Figs. 6 and 6b.

BACK FACE TRIM. Since the **back face trim (I)** won't be seen, I didn't bother with the roundover. Instead, I just cut it to size (3/8" x 3/8"). I also didn't worry about mitering the ends of the back trim pieces to length — they're simply cut off square.

Before installing the clock face and back face trim pieces, I secured the clock movement to the backer board and dial. This is just a matter of sliding the backer board and dial over the shaft of the clock movement and then threading the movement retaining nut onto the shaft.

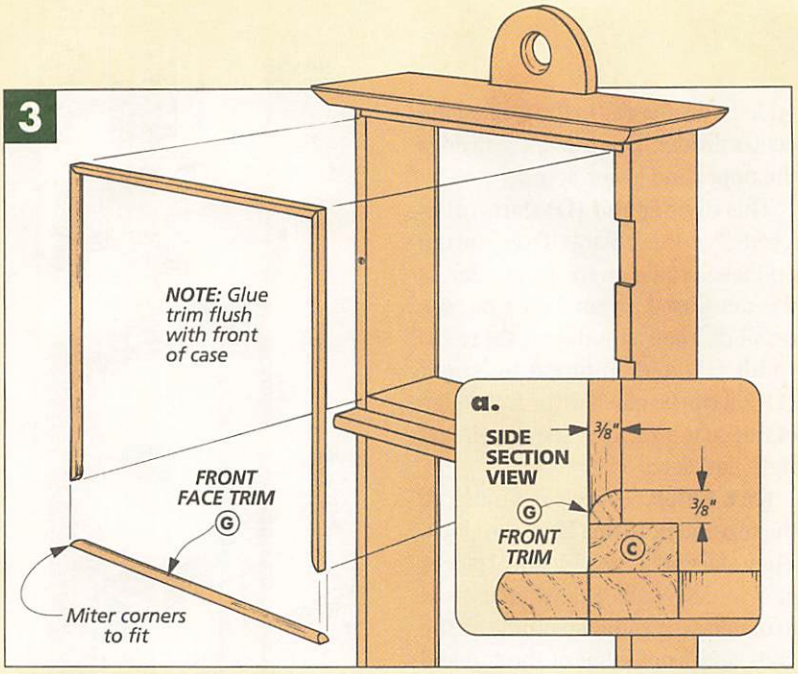

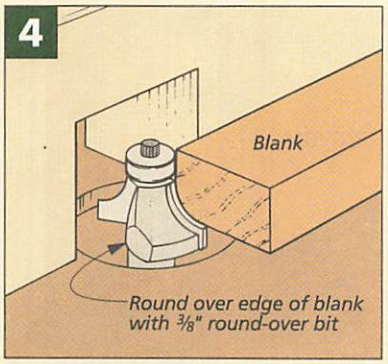

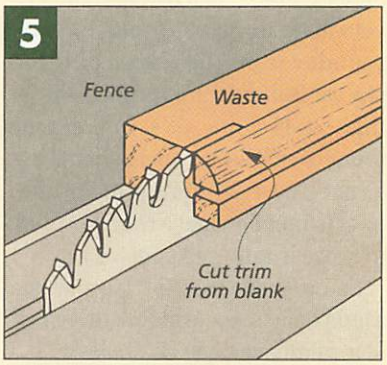

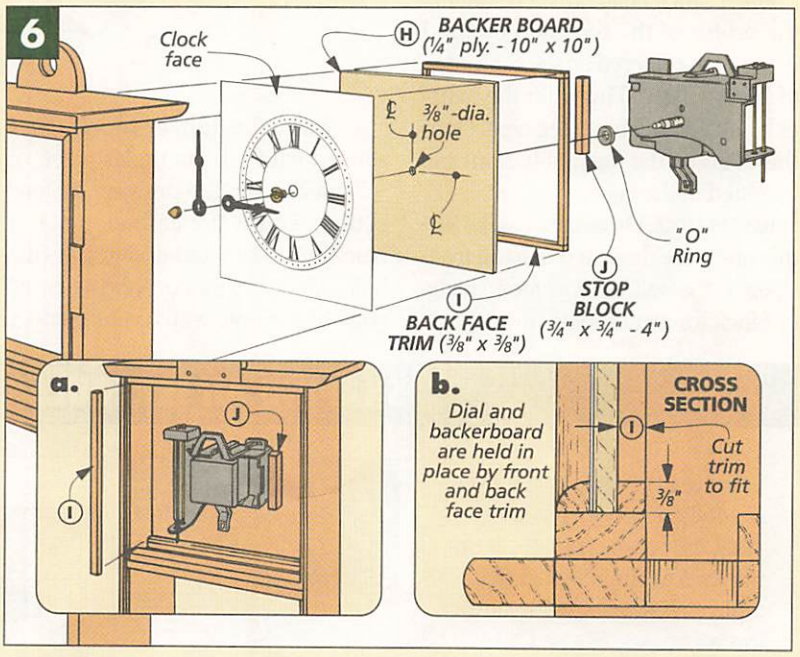

There's also one other detail to tend to. After I finished my clock, I discovered that the weight of the battery causes the clock movement to droop to one side. So to solve this problem, I simply glued a narrow **stop block (J)** to the back of the clock face, against the side of the movement, see Fig. 6a. Once this is done, the clock face and back face trim pieces can be installed.

Back

The clock movement that we used has a mechanical striking mechanism with an on-off switch. This way you can turn the striking mechanism off if you don't want to hear it. But in order to do this, you'll need access to the back of the clock since this is where the switch is located. (You'll also need to get at the back of the clock whenever you need to change the clock battery.)

Originally, I planned on making the back out of a single piece of 1/4"-thick plywood and holding it in place with brass turn buttons at the sides as well as the top and bottom. But because of the rabbets cut in the back edge of the side pieces, there wasn't a wide enough space to mount the turn buttons.

So instead, I made the back in two pieces. This allowed me to nail the lower back in place and use turn buttons only on the upper back.

LOWER BACK. First, I cut a **lower back (K)** out of 1/4"-thick plywood to fit between the sides, flush with the top of the center divider, see Fig 7. Note: The spacer (C) should not be covered by the lower back, see Fig. 7b.

Since you'll have access to the lower portion of the case from the front of the clock, the lower back can simply be nailed in place with some 1/2"-long brads, see Fig 7c.

UPPER BACK. Next, I cut an **upper back (L)** (also from 1/4" plywood) to fit between the top of the case and the lower back. And in order to make it easier to remove this back, I drilled a 1"-diameter finger hole near the top of the back, see Fig. 7.

BRASS TURN BUTTONS. Because of its small size, I only needed two pairs of turn buttons to hold the upper back in place. A pair at the top are fastened to the back edge of the top piece, see Fig. 7a. At the bottom, I simply screwed the turn buttons through the lower back and into the center divider, see Fig. 7b.

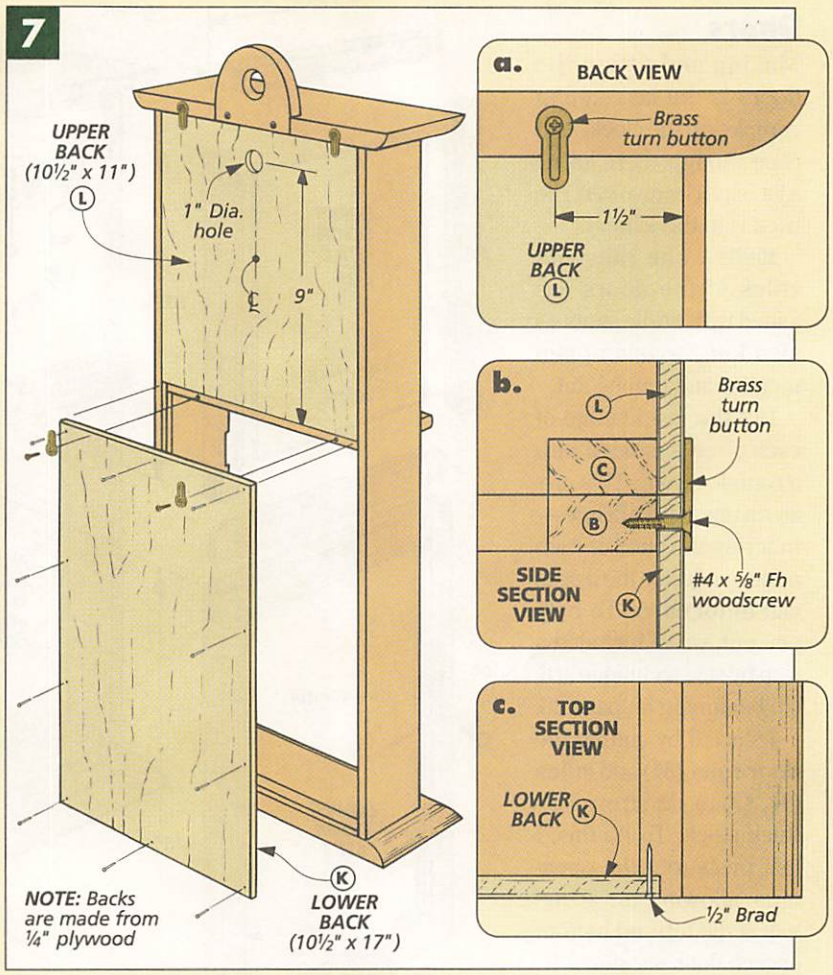

ADJUSTING THE PENDULUM

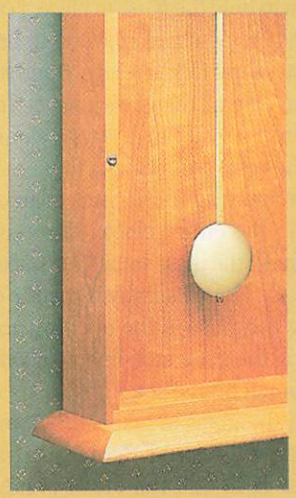

Originally, pendulums were used to regulate clocks. Moving the bob (the large metal disc at the end of the pendulum) up or down made the clock run faster or slower.

However, since we used a quartz movement, the pendulum is really just for looks. (Although it swings, it doesn't affect the time-keeping of the clock.) So the length of the pendulum is determined more by the desired appearance.

On this clock, the 19" pendulum has an actual length of 16". (The 19" is from the hand shaft.) But if you have a longer pendulum or you're making a smaller clock, you can easily shorten the pendulum length.

Most pendulums have score lines spaced 1" apart on the back of the pendulum rod, see Fig. 1. All you have to do is break off one or more of the scored segments to shorten the pendulum. Then just place the pendulum hook in the slot in the movement, see Fig. 2.

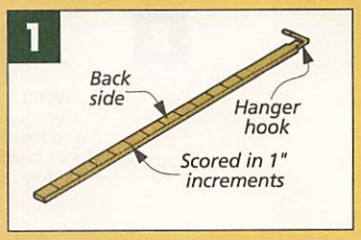

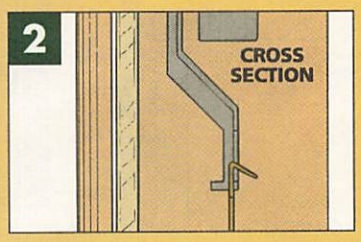

Doors

Making and fitting the doors is the last step in completing the clock. And even though there aren't a lot of pieces involved, the trick is in the joinery.

JOINERY. The rails and stiles of the doors are joined with bridle joints — also known as an open mortise and tenon joint.

But the inside edge of each piece is molded with a roundover bit. This creates a unique challenge — mitering the ends of each molded edge so the pieces can fit together. To help you out, we've included a step-by-step technique article beginning on page 26.

I started by cutting the **door rails (M)** and **stiles (N, O)** to size from $^3/_4$"-thick stock. To do this, I just measured the openings, allowing for a $^1/_{16}$" gap at the top and bottom of each door, see detail 'b'.

After molding the edges of the frame pieces with a round-over bit and cutting the rabbets for the glass, I cut the bridle joints, see detail 'a' and the technique article on page 26.

HARDWARE. Once the door frames were assembled, I installed the hinges and mounted the doors to the case to check the fit. Then, I installed a wood knob on each door.

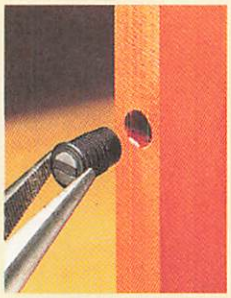

▲ *A pair of needle-nose pliers are good for gripping the magnetic catches while epoxying them into the holes in the clock case.*

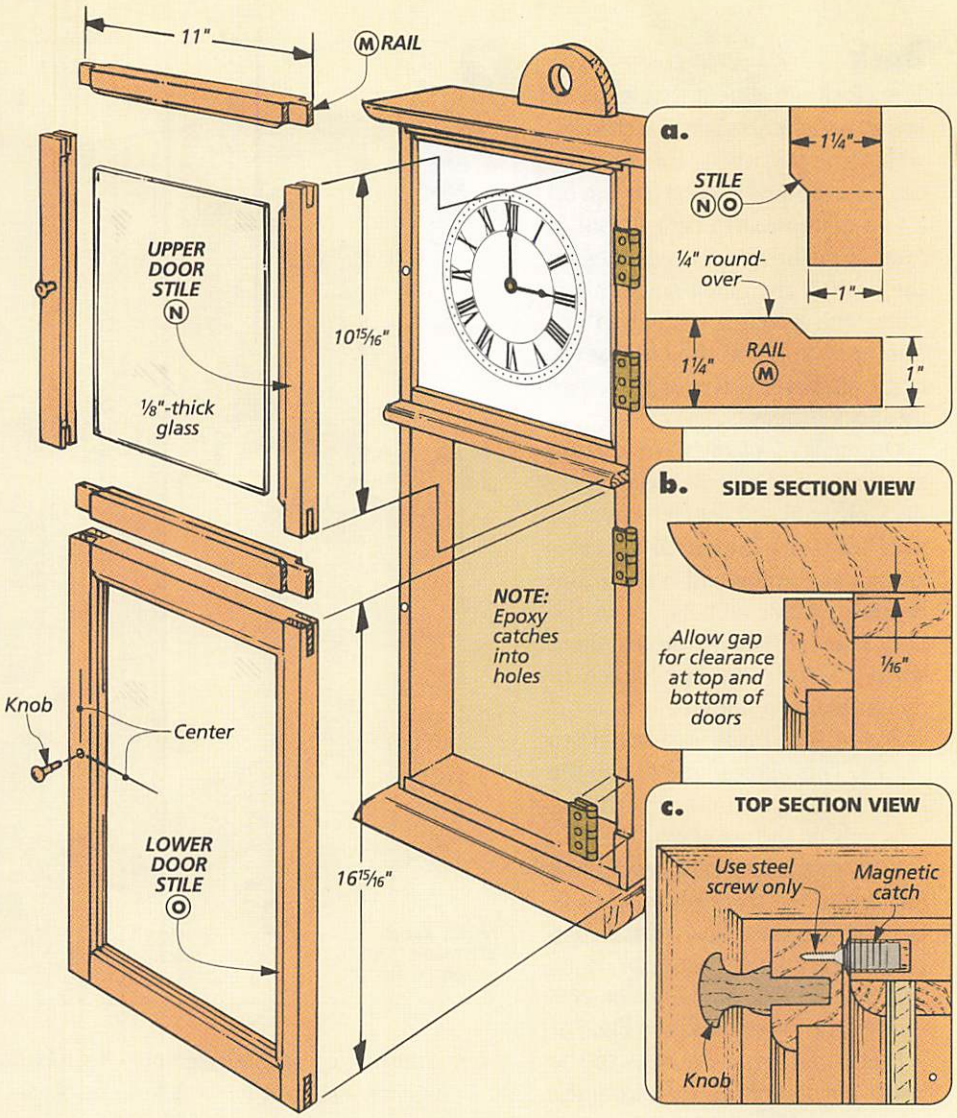

Finally, I epoxied the magnetic catches into the side of the clock case, see photo at left. But instead of using the strike plates that come with the catches, I used just the screws, see detail 'c'. The screwhead has a lower profile than the strike plate so the doors won't stick out too far from the case when they're closed.

GLASS. With the hardware installed, I removed the doors and measured the glass openings. The glass is cut $^1/_8$" smaller than the openings to allow for a $^1/_{16}$" clearance gap on all sides.

Then to hold the glass in place, I cut some $^1/_4$" x $^3/_8$" strips of wood to use as **glass stops (P)**, see Figs. 8 and 8a. But don't install the glass just yet. It's easier to apply a finish to the doors (and the rest of the clock) first.

After applying three coats of an oil finish to the entire clock (don't forget to finish the glass stops), I installed the glass. This is simply a matter of placing the glass in the opening and securing the glass stop behind it with some small brads, see Fig. 8a.

With the glass in place, the doors can be remounted. Now all that remains is to add the clock pendulum, see box on previous page. W

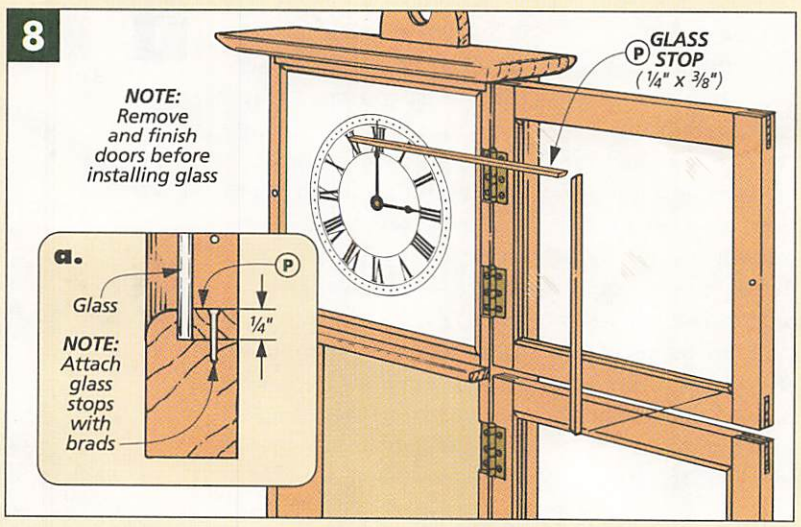

SOURCES

Woodsmith Project Supplies offers hardware kits and supplies for some of the projects shown in this issue. Similar supplies for these projects are also available at your local hardware store or through the mail order sources at right.

CURIO CABINET

A complete hardware kit for the curio cabinet on page 6 is currently available from *Woodsmith Project Supplies*. The kit includes the following items:

(8) Spoon-style Shelf Pins
(2 pr.) 2" x 1⅜" Butt Hinges
(24) #5 x ⅜" Brass Screws
(44) #17 x ¾" Wire Brads
(13) ⅜" End Grain Plugs
(2) ⅝"-dia. Brass Knobs
(2) Double Ball Catches
(15) #8 x 1½" Fh Screws
(6) #8 x 1" Fh Screws
Curio Cabinet Hardware
7113-100 ..... $17.95

Note: The #5 screws listed above are to be used when mounting the hinges. (The woodscrews provided with the hinges are too long for the curio cabinet.)

Also keep in mind that this kit does *not* include the ⅛"-thick glass panels for the doors or the eight feet of 2" cove molding used at the top and bottom of the cabinet. And you'll also need to provide your own hardware for mounting the cabinet cleat to the wall. (To secure our wall cleat, we used two #8 x 2½" Fh woodscrews.)

SHAKER WALL CLOCK

When choosing the clock movement for the Shaker wall clock on page 28, we decided to use a modern quartz movement, see photo. And we wanted it to have chimes. But we didn't like the sound of the electronic chimes, so we found a quartz movement with real ("bim-bam") chimes.

Currently, *Woodsmith Project Supplies* is offering a hardware kit for the Shaker wall clock. This kit does *not* include the ⅛"-thick glass panels required for the doors. And it does *not* include the maple Shaker pegs we used to hang the clock (see the photo on page 28). The kit does include the following:

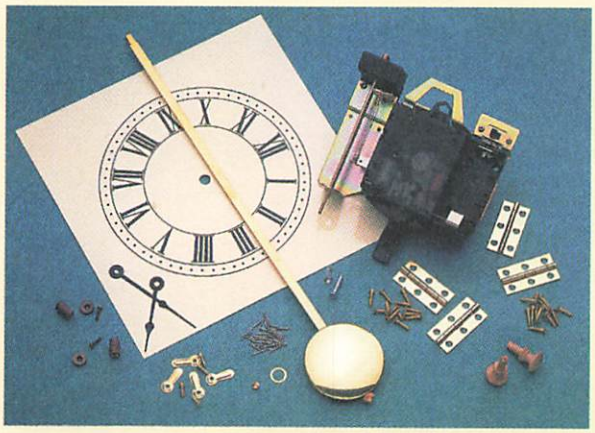

(2) 5/16" Magnetic Catches
(4) Brass Turn Buttons
(4) #4 x ½" Brass Screws
(2 pr.) 2" x 1" Butt Hinges
(1) Quartz Movement with 19" Pendulum and 2¾"-dia. Bob
(1) 9⅞" Roman Face (7⅜" Time Ring)
(1 pr.) 3 7/16"-long "Spade" Clock Hands
(2) #8 x 1" Woodscrews
(34) #18 x ½" Wire Brads
(2) ¾" Cherry Knobs
Shaker Clock Hardware Kit
7113-200 ..... $110.95

Note: The length of the pendulum is measured from the hand shaft on the clock movement. So a 19"-long pendulum actually measures about 16".

Quartz movement clocks with real chimes are also available at the sources listed at right. Or if you want to order a mechanical movement for the clock, call Woodcraft, see listing at right. And regardless of what clock you order, make sure you have the movement on hand before building the clock case so you can make changes to the dimensions as needed.

MAIL ORDER SOURCES

Similar project supplies and hardware may be ordered from the following companies:

Klockit
800-556-2548
Shaker clock movement & face

Lee Valley
800-871-8158
Curio cabinet hardware

Precision Movements
800-533-2024
Shaker clock movement & face

Turncraft Clocks
800-544-1711
Shaker clock movement & face

Woodcraft
800-225-1153
Curio cabinet hardware

Woodsmith Store
800-835-5084
Curio cabinet hardware, Shaker clock movement & face, Shaker clock hardware

Woodworkers' Store
800-279-4441
Curio cabinet hardware, Shaker clock hardware

WOODSMITH PROJECT SUPPLIES

If you would like to order project supplies or books from *Woodsmith Project Supplies*, please use our Toll Free order line, see below. It's open Monday through Friday, from 8 AM to 5 PM Central Time.

Before calling, please have your VISA, MasterCard, or Discover Card ready.

If you would like to mail your order in, call the number below for more information concerning shipping charges as well as any applicable sales tax.

1-800-444-7527

Note: Prices subject to change after December 1997

WoodNet™ NOW ON THE WEB!

- Over 70 Woodworking Tips Online
- Project Plans You Can Download
- WoodNet Forum — Woodworkers' Q & A
- Home Improvement Forum
- Power Tool Reviews
- Links to Other Woodworking Sites
- Online Back Issue Index

Point your browser to:

http://www.augusthome.com

Select "Woodworking" from the Welcome Page menu.

Final Details

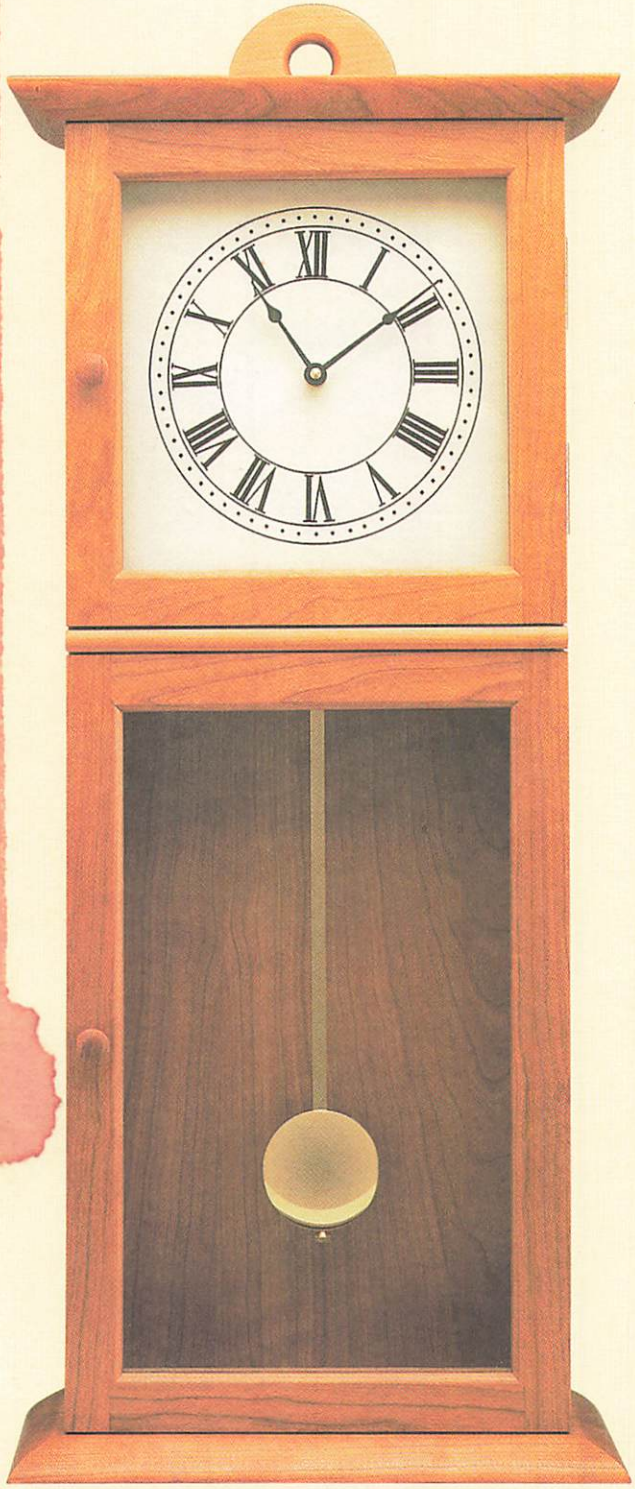

▲ **Shaker Wall Clock.** *One of the features that makes this Shaker-style clock unique is the joinery we used on the doors — molded bridle joints. Complete step-by-step plans begin on page 28.*

▲ **Curio Cabinet.** *Pre-made cove molding and beaded glass doors make this curio cabinet an attractive home for your collectibles. See page 6 for plans.*

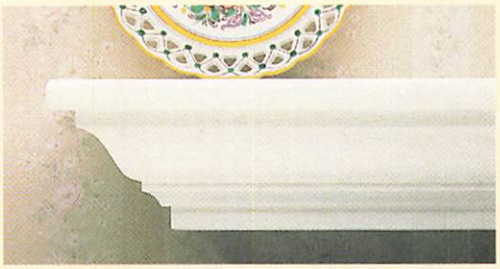

◄ **Display Shelf.** *This classic shelf can be quickly built using pre-made crown molding. Plans begin on page 16.*

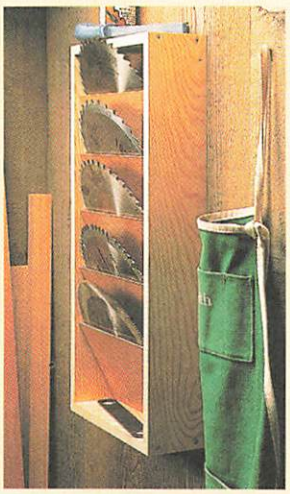

▲ **Saw Blade Rack.** *Our shop-built rack is a handy way to store and protect your saw blades. Detailed plans begin on page 22.*